STATE OF NEW YORK
DEPARTMENT OF TRANSPORTATION

SOIL MECHANICS
BUREAU

February 1987

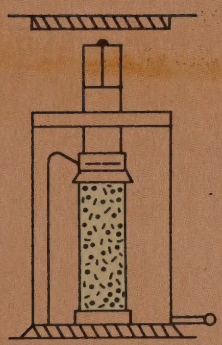

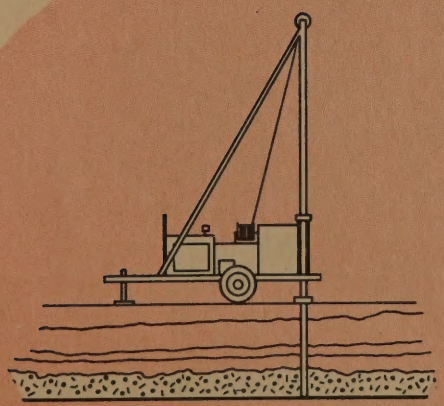

Users Manual for

GREWALL: A Computer Program for Gravity Retaining Wall Design and Analysis

SM 238b (1/73)

NEW YORK STATE DEPARTMENT OF TRANSPORTATION

SOIL MECHANICS BUREAU

GREWALL: A COMPUTER PROGRAM FOR GRAVITY RETAINING WALL DESIGN AND ANALYSIS

John L. Henkes, Assistant Soils Engineer

TABLE OF CONTENTS

		Page No.
I.	Introduction	1
II.	The Culmann Graphical Solution	2
III.	Culmann Computer Solution	5
IV.	Water Pressure	5
V.	Concentrated Line Loads on the Backfill and Wall	7
VI.	Broken Back Wall	8
VII.	Factors of Safety for Overturning and Sliding	9
VIII.	Footing Pressures	11
IX.	Soil Properties	12
X.	Before You Call GREWALL	13
XI.	Some Helpful Notes on Input	14
XII.	Example Input	15
XIII.	Fortran Listing	23

NYSDOT
Library
50 Wolf Road, POD 34
Albany, New York 12232

For a comparison, an analysis performed using an angle of internal friction of 20° (or Ka=0.5), would be appropriate for a wall with cohesive backfill (Tschebotarioff, G.P. (1951). Soil Mechanics Foundation and Earth Structures. New York; McGraw - Hill). Furthermore, the Soils Bureau does not design retaining structures with cohesive backfill. However, if you are analyzing an existing structure with cohesive backfill an angle of internal friction not greater than
20° is recommended.

II. The Culmann Graphical Solution

To illustrate the methodology of the Culmann analysis, an excerpt from Bowles' book will be presented. Following this excerpt will be a description of how this graphical solution was incorporated into the program GREWALL.

The steps involved in the Culmann solution for active and passive pressure, as presented by J. E. Bowles in Foundation Analysis and Design, are as follows:

1. Draw the retaining wall to any convenient scale, together with the ground line, location of surface irregularities, point loads, surcharges, and the base of the wall when the retaining wall is a cantilever type.
2. From the point A lay off the angle ϕ with the horizontal plane, locating the line AC. Note that in the case of a cantilever wall, the point A is at the base of the heel, as shown in Fig. 11-14*b*.

For a comparison, an analysis performed using an angle of internal friction of 20° (or K_a=0.5), would be appropriate for a wall with cohesive backfill (Jacobsen/McGraw-Hill, 0.F. (1953)). Soil Mechanics Foundation and Earth Structures. New York; McGraw - Hill). Furthermore, the Soils Bureau does not design retaining structures with cohesive backfill. However, if you are analyzing an existing structure with cohesive backfill as angle of internal friction not greater than 20° is recommended.

II. The Coleman Graphical Solution

To illustrate the methodology of the Coleman analysis, an excerpt from Bowles' book will be presented. Following this excerpt will be a description of how this graphical solution was incorporated into the program CRETWALL.

The steps involved in the Coleman solution for active and passive pressure, as presented by J. E. Bowles in Foundation Analysis and Design, are as follows:

1. Draw the retaining wall to any convenient scale, together with the ground line, location of surface irregularities, point loads, surcharges, and the base of the wall when the retaining wall is a cantilever type.
2. From the point A lay off the angle ϕ with the horizontal plane, locating the line AC. Note that in the case of a cantilever wall, the point A is at the base of the heel, as shown in Fig. 11-14b.

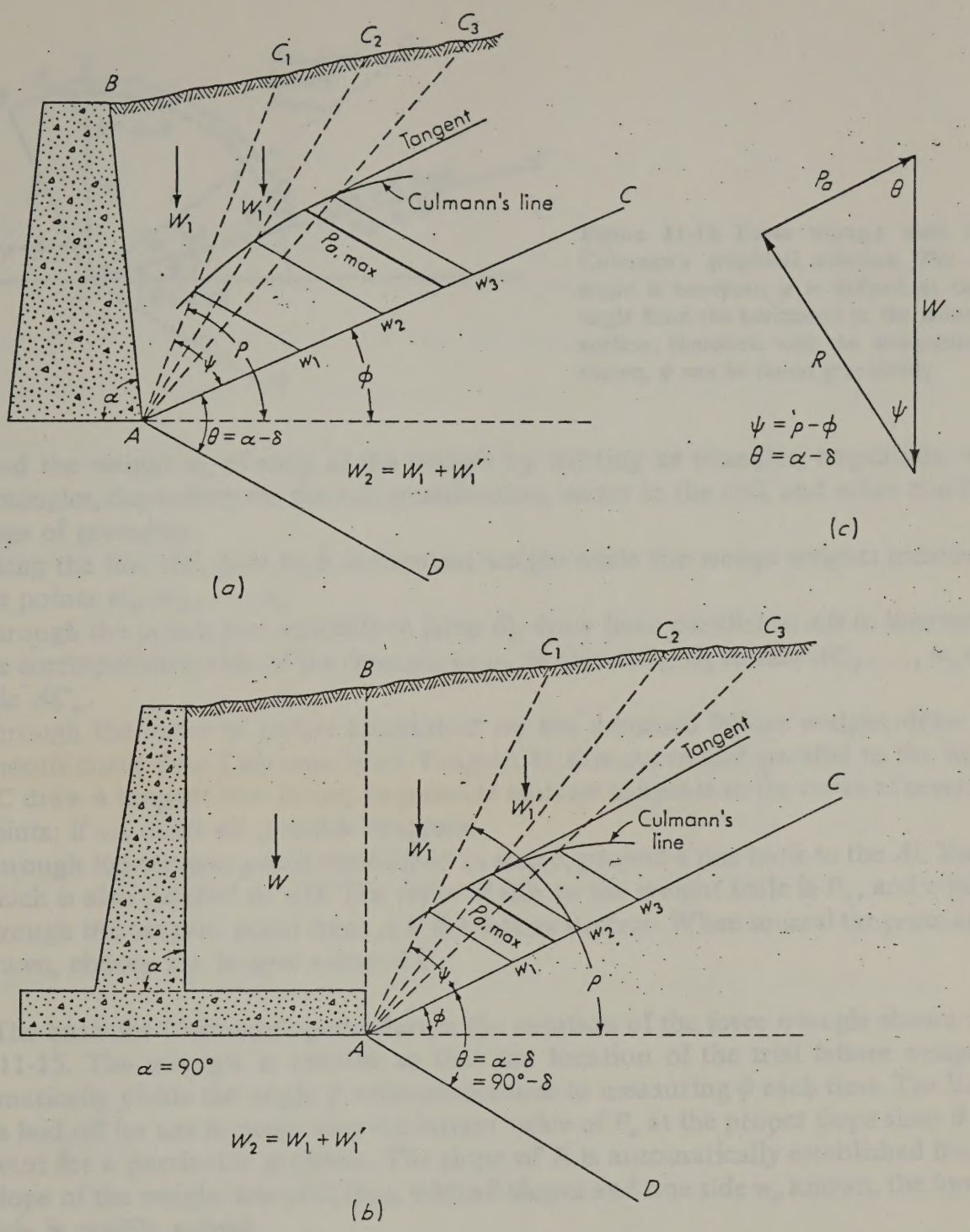

Figure 11-14. Culmann's solution for active earth pressure. (*a*) No interference with wall or footing; (*b*) cantilever retaining wall; (*c*) force polygon used in the Culmann graphical solution.

3. Lay off the line AD at an angle of θ with line AC. The angle θ is computed as

$$\theta = \alpha - \delta$$

where α = angle back of wall makes with the horizontal
δ = angle of wall friction

4. Draw assumed failure wedges as ABC_1, ABC_2, ..., ABC_n. These should be made utilizing the backfill surface as a guide, so that geometrical shapes such as triangles and rectangles are formed.

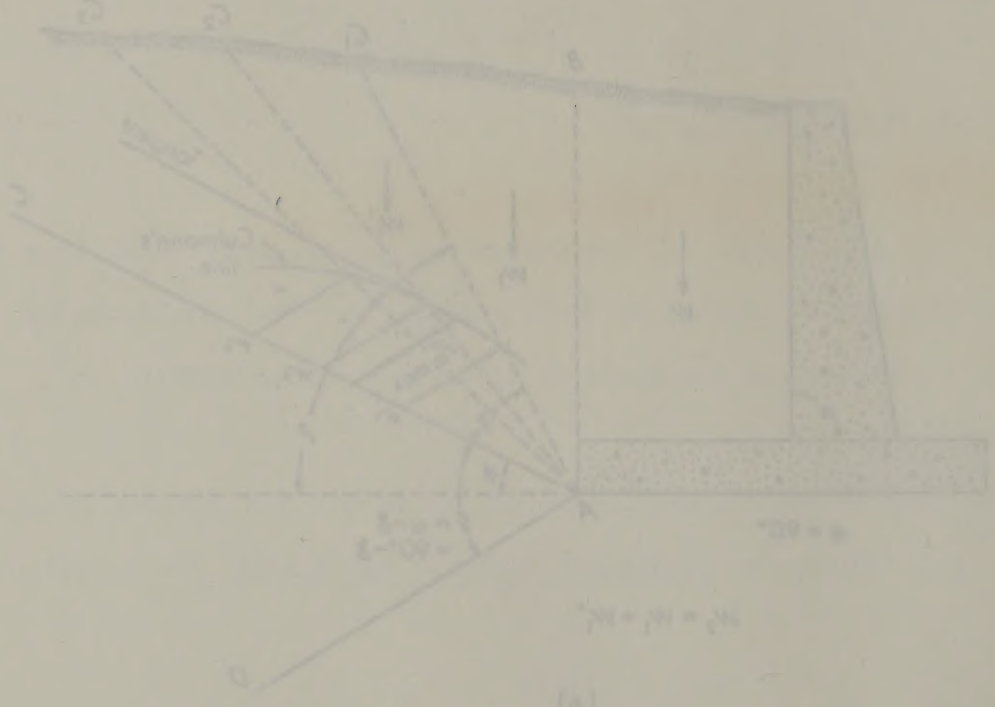

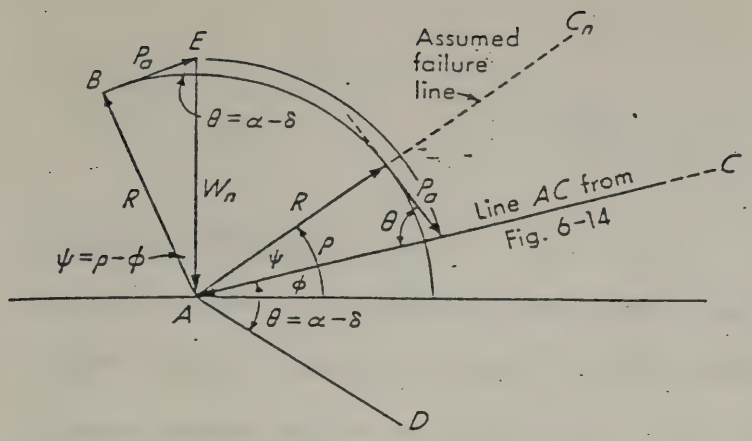

Figure 11-15. Force triangle used in Culmann's graphical solution. The θ angle is constant; ρ is defined as the angle from the horizontal to the failure surface; therefore, with the orientation shown, ψ can be found graphically.

5. Find the weight w_n of each of the wedges by treating as triangles, trapezoids, or rectangles, depending on the soil stratification, water in the soil, and other conditions of geometry.
6. Along the line AC, plot to a convenient weight scale the wedge weights locating the points $w_1, w_2, \ldots, w_n$.
7. Through the points just established (step 6), draw lines parallel to AD to intersect the corresponding side of the triangle, as w_1 to side AC_1, w_2 to side $AC_2, \ldots, w_n$ to side AC_n.
8. Through the locus of points established on the assumed failure wedges, draw a smooth curve (the Culmann line). Tangent to this curve and parallel to the line AC draw a tangent line. It may be possible to draw tangents to the curve at several points; if so, draw all possible tangents.
9. Through the tangent point established in step 8, project a line back to the AC line, which is also parallel to AD. The value of this to the weight scale is P_a, and a line through the tangent point from A is the failure surface. When several tangents are drawn, choose the largest value of P_a.

The basis for Culmann's procedure is the solution of the force triangle shown in Fig. 11-15. The triangle is rotated so that the location of the trial failure wedges automatically yields the angle ψ without recourse to measuring ψ each time. The line AD is laid off for use in projecting the instant value of P_a at the proper slope since θ is constant for a particular problem. The slope of R is automatically established from the slope of the weight line AC; thus, with all slopes and one side w_n known, the force triangle is readily solved.

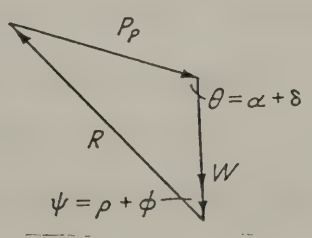

Figure 11-17. Culmann's solution force polygon, which is graphically solved for passive pressure

III. Culmann Computer Solution

GREWALL starts its analysis from a soil surface input by the user (see Figure 11-14 of Bowles or page 3 of this manual). From the line AB the program sweeps angles out one degree at a time to form soil wedges and computes its area. The line the program forms between points A and C, extends to the backfill surface which is input by the user. The area it computes is multiplied by the unit weight of the material to give a force per unit length of wall. For each force the program solves the force triangle shown Figure 11-15 (page 4) for the active pressure (Pa) or for passive pressure (Pp) Figure 11-17 (page 4). The program will report the maximum Pa and the minimum Pp that is computed from the force triangle. GREWALL then computes the center of gravity of the failure wedge and determines the point of application of the force by extending a line parallel to the failure plane, threw the center of gravity, to the wall surface. The force is oriented Delta (wall friction angle) degrees above the perpendicular of the wall.

IV. Water Pressure

When the user indicates that the ground water level is present above the footing or base elevation, the program will subtract the unit weight of water (62.4 lb/ft^3) from that portion of the failure wedge below GWL. This will reduce the active pressure computed and will raise the center of gravity of the failure wedge hence the point of application for Pa and Pp. The program will then report separate force quantities for fluid pressure on the wall; one acting on the front and one on the back of the wall. All of these forces are considered when computing factors of safety and footing pressures for the wall.

When ground water level is present above the footing elevations it is necessary to use the buoyant unit weight of the wall material, for that portion of the wall under water (see Figure 1).

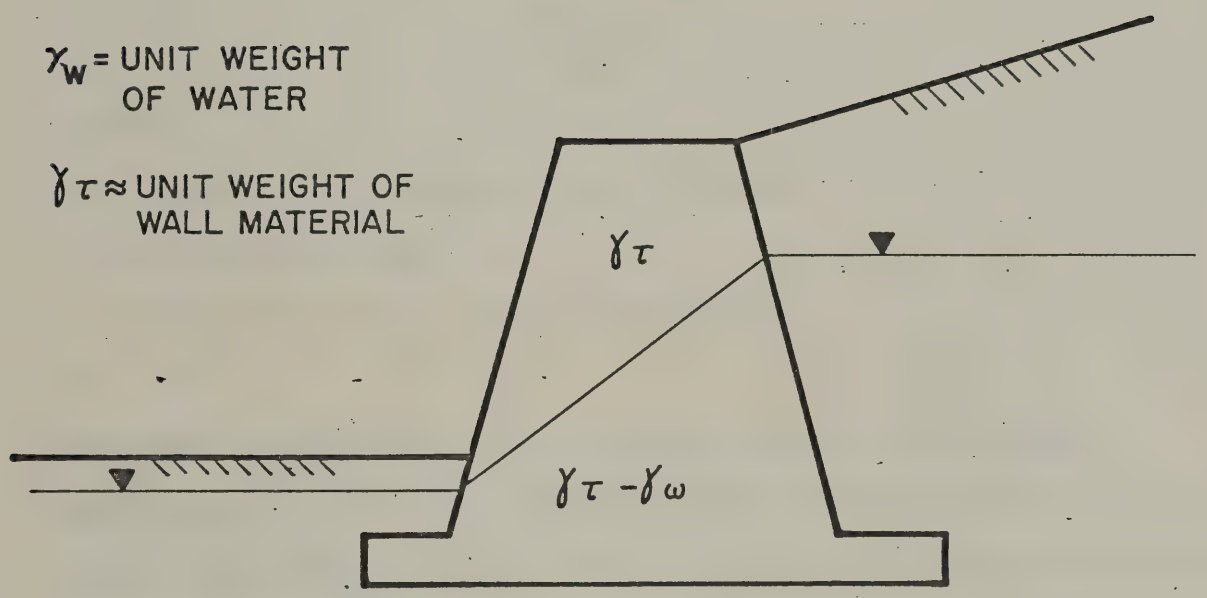

Figure 1. GREWALL'S method of accounting for uplift forces due to water pressure.

The user may find it easier to enter the wall using the total unit weight and then superimpose a wall of water with a unit weight of negative γw(or-62.4 pcf). Consult the section XII Example Input for illustration of this.

V. Concentrated Line Loads

A. On Backfill

When a concentrated line load is specified by the user, GREWALL will compute the pressure distribution acting on the wall as:

$$h = \frac{4P\ x^2\ z}{\pi R^4}$$

In which:

h = horizontal unit pressure on wall at depth z

P = load per unit length

x = horizontal distances from wall to line load

$R = x^2 + z^2$

This method was obtained from M.G. Spangler and R.L. Handy's Soil Engineering Fourth Edition. GREWALL computes a single resultant for the pressure distribution and locates the resultant at the center of area under the pressure curve. The resultant is acting horizontally.

B. On the Wall

The user may input concentrated line loads acting on the wall to analyze the effects of anchor or other external static forces. They are input by location direction and magnitude and simply added to the other forces acting on the wall when computing the footing pressures and factors of safety. GREWALL will check the sign (+ or -) and direction of each force and will add the resulting moment to either the overturing moment or resisting moment as indicated.

VI. Broken Back Wall

At the users option, GREWALL will perform a modified analysis for retaining walls with two distinct back wall surfaces. If the wall is more accurately modeled as having two surfaces (see figure 2) this option should be used.

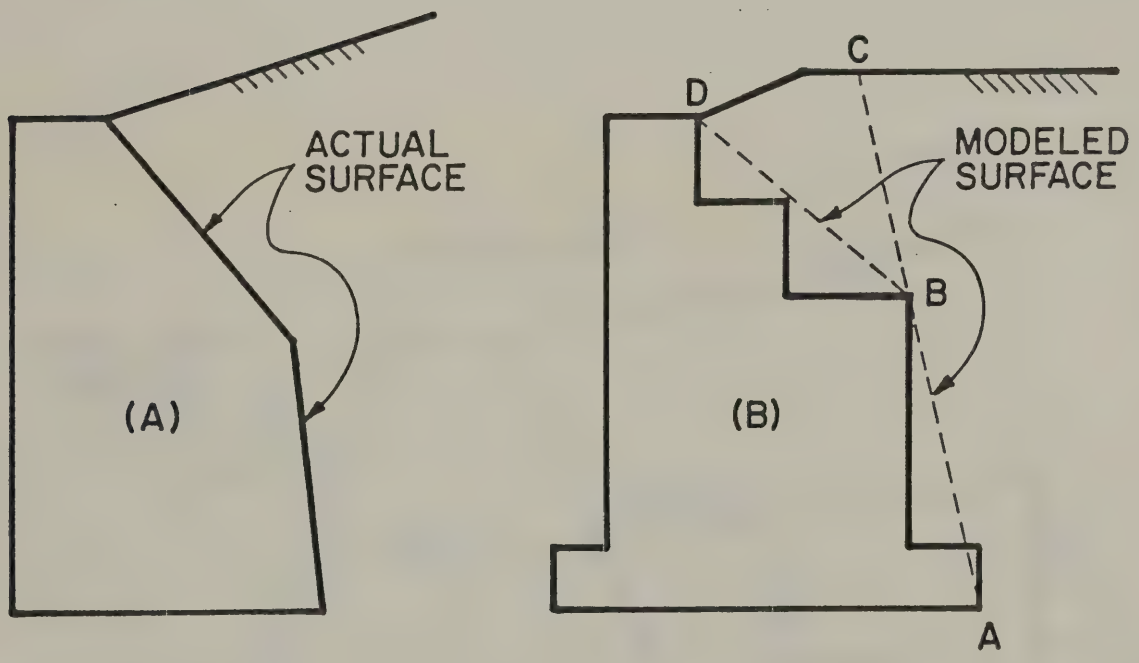

Figure 2. Common broken back wall problems

GREWALL will first compute forces on surface BD. It will then compute the force acting on the surface BC and then AC. The force on surface BA is computed last by subtracting BC from AC. Two forces are presented for broken back wall problems, one above and one below the break.

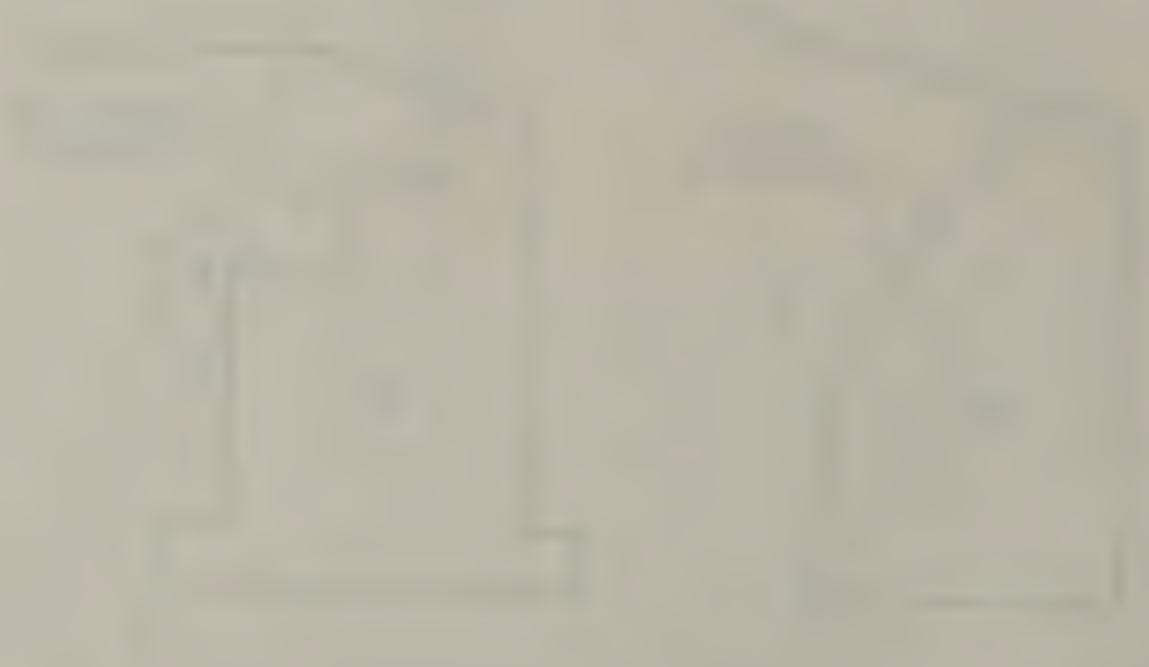

VII. Factors of Safety (FoS) For Overturning and Sliding

Retaining walls must provide adequate stability against sliding and overturning. The passive earth pressure acting in front of the wall is not considered by GREWALL. This soil may erode or may be excavated thus eliminating this resistance to sliding. When computing the FoS for sliding and overturning GREWALL considers all forces acting in the system.

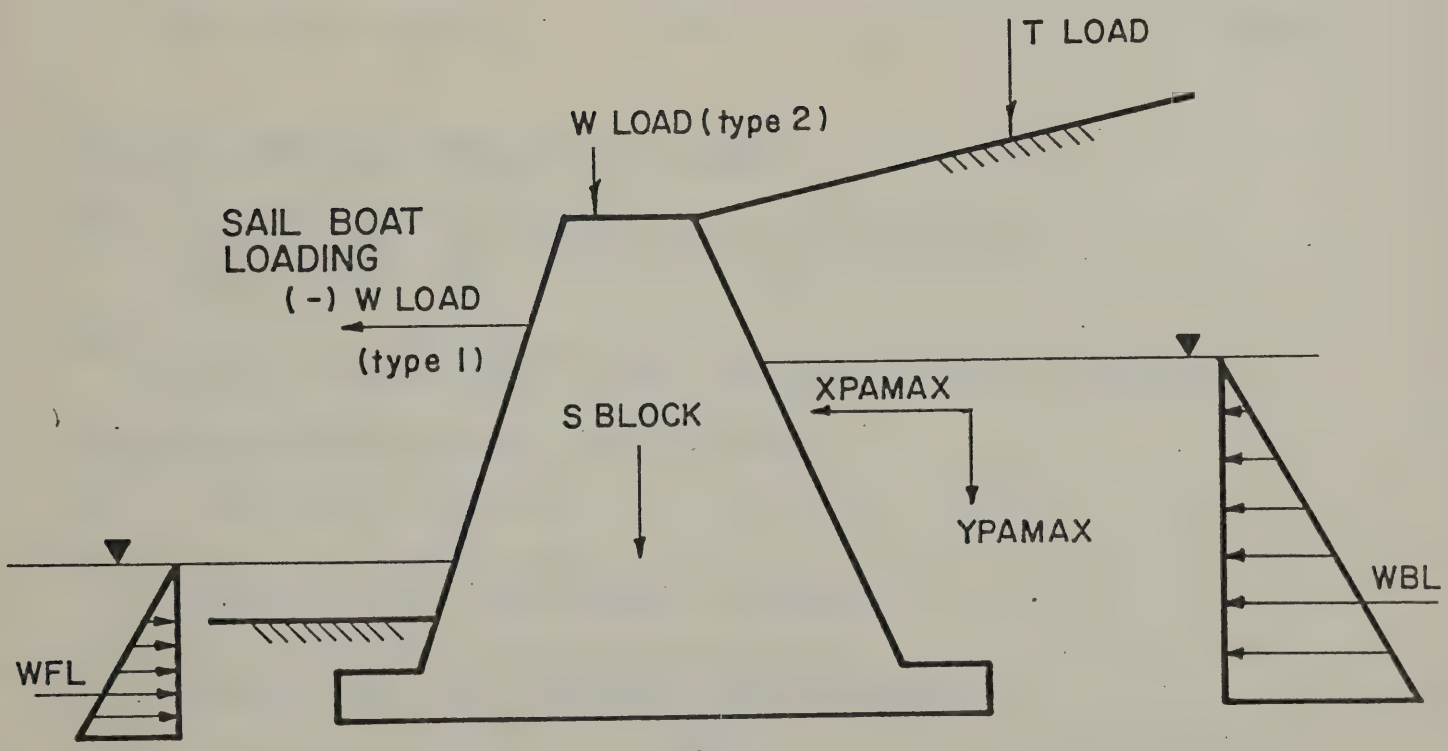

Figure 3. Summary of forces acting in a GREWALL system.

The following is a summary of the forces that may act in the system followed by its FORTRAN name, direction and moment arm:

FORCE DESCRIPTION	FORTRAN NAME	DIRECTION	MOMENT ARM
Active Soil X-Direction	XPAMAX	←	RESDX
Active Soil Y-Direction	YPAMAX	↓	RESDY
Wall and Soil Resultant	SBLOCK	↓	RXBL
Water Force Above Toe	WFL	→	WFLR
Water Force Above Heel	WBL	←	WBLR
°Line Load on Wall (Type 1)	WLOAD (I)	− ↔ +	WLX (I)
°Line Load on Wall (Type 2)	WLOAD (I)	− ↕ +	WLX (I)
Line Load on Backfill	TLOAD (I)	←	TLOADZ (I)

FACTOR OF SAFETY FOR OVERTURNING = FOSR/FOSO

FOSO = Sum of the overturning moments
= XPAMAX * RESDX + WBL * WBLR + WUPS * WUPM + TLOAD (I) * TLOADZ (I)
+ WLOAD (I) * WLX (I)

FOSR = Sum of the resisting moments
= YPAMAX * RESDY + SBLOCK * RXBL + WFL * WFLR + WLOAD (I) * WLX (I)

FACTOR OF SAFETY FOR SLIDING = FOSRS * FAC/FOSS

FAC = Coefficient of friction

FOSRS = Sum of the Vertical Forces
= YPAMAX + SBLOCK - WUPS + WLOAD (I) (Type 2)

FOSS = Sum of forces in the horizontal direction
= XPAMAX + WBL - WFL + WLOAD (I) (Type 1) + TLOAD (I)

°Note: If the sign of WLOAD (I) is positive its moment will be added to the resisting moments; if it is negative it will be added to the overturning moments.

VIII. Footing Pressures

$$\text{FOOTING PRESSURE at Toe} = QT = FOSRS/BASEL * 1 + \frac{(6 * QTE)}{(BASEL)}$$

$$\text{FOOTING PRESSURE at Heel} = QH = FOSRS/BASEL * 1 - \frac{(6 * QTE)}{(BASEL)}$$

$$QTE = \text{eccentricity} = (BASEL/2)-(FOSR - FOSO)/FOSRS)$$

BASEL = width of footing

GREWALL may report a footing pressure that is negative. This does not mean that the actual pressure is negative but rather that the reaction force is located outside the middle third of the footing width. Generally this condition is considered unacceptable. To determine how much of the footing is being utilized assume a linear change in pressure between the toe and heel pressures.

IX. Soil Properties

GI - Total Unit Weight of Backfill Material (pcf)

PHI - Angle of Internal Friction (degrees) - For cohesive soils PHI should be determined by consolidated drained tests. However, cohesive soils are subject to creep. Long term stable active pressure (called consolidated equilibrium pressure by Tschebotarioff) is approximately $.5\gamma h$. Therefore, for cohesive soils a PHI greater than 20° is not recommended. For granular material use the best information available.

DELTA- Wall Friction Angle (degrees) - Values between $.4\phi$ and $.6\phi$ are considered reasonable. Values as high as $.9\phi$ may be considered for gabion retaining walls because of the high wall-soil interaction.

FAC - Coefficient of Friction - Tan (ϕ) - Used in computing factors of Safety for sliding. For further guidelines consult Table 1 "Ultimate Friction Factors and Adhesion for Dissimilar Materials" NAVFAC DM-7.2, p. 7.2-63.

X. Before You Call GREWALL

1a) Sketch the wall configuration using straight lines. Orient the wall such that the backfill is to the right. Establish a coordinate system with the toe of the wall at point (Ø,Ø); GREWALL will compute factors of safety for overturning by summing moments about this point. Divide the wall into blocks of rectangles and right triangles; number the blocks and be prepared to input the coordinates of the blocks. If ground water is present, dash a line between the water elevations in front and in back of the wall. When entering the unit weight of the block below this dash line use the buoyant unit weight The coordinate system should be in units of feet.

OR

1b) Do not include the wall configuration. GREWALL is capable of analyzing a plain surface without a wall and will report only the pressures acting on that plain surface. You must still sketch the backfill and plain surface and establish a coordinate system. All points on your sketch must have a positive sign.

2a) Model the soil or wall surface which the backfill is acting on using one line and label the points with their coordinates. The intersection between the backfill and the wall should be the first point of the backfill model.

OR

2b) For broken back wall problems, model the wall surface using two lines and label the points with their coordinates. Extend the surface from the break point to the backfill surface as shown in figure 1 (pg. 8). Point (C) is now a point on backfill, number the backfill lines including this point.

OR

3) Model the backfill using straight lines (limit 1Ø) and number the lines from left to right. Label each point with an X and Y coordinate based on the established system. Be sure to extend the backfill beyond a probable failure plane.

4) Gather the following information for input.
   a) unit weight of backfill and retaining wall material (pcf)
   b) friction angle of backfill in degrees
   c) wall friction angle in degrees (if granular backfill)
   d) coefficient of friction between the foundation and the wall
   e) static water levels above toe and heel of wall

XI. Some Helpful Notes on Input

1) The computer system will not accept an "enter" as a (Ø) input. You must put in Ø, then "enter".

2) Use decimal points only when necessary. Do not use decimals for yes or no answers, or for counter (number of) values.

3) Use commas to separate values on an input line. Do not put a comma at the end of an input line, the computer will expect another value if you do.

XII. EXAMPLE INPUT

The following example problem is an illustration of what the user of GREWALL will see. Notes have been added to help explain the workings of GREWALL however these notes will not appear during the program run.

Problem - set up as described in Before You Call GREWALL of this manual.

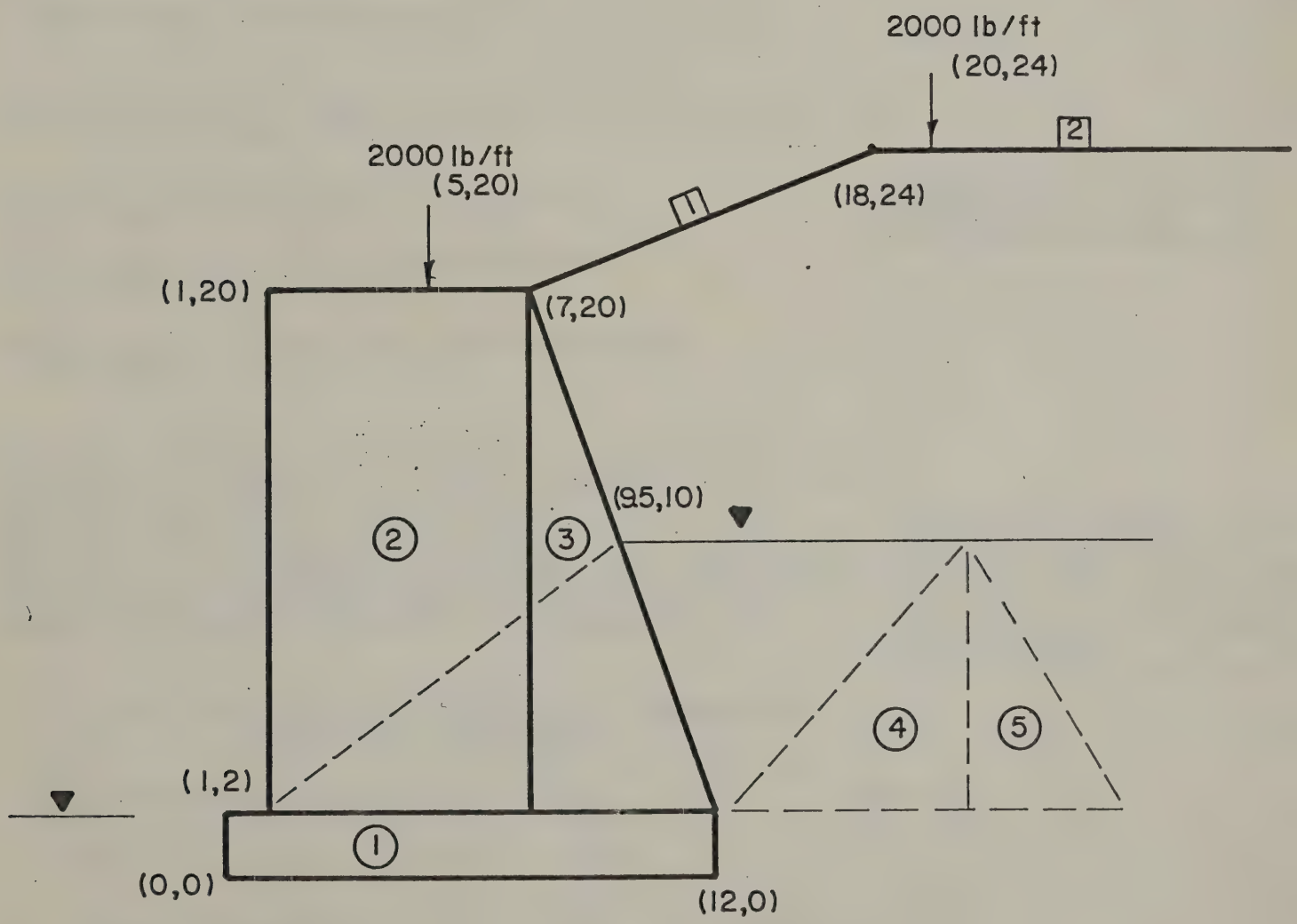

Soil Parameters:

Total unit weight ..... 120 pcf

Angle of interval friction..... 34 degrees

Wall friction angle..... 20 degrees

Wall-Soil, coefficient of friction.. .55

TO RUN GREWALL - FROM THE MAIN MENU SELECT STRUCTURES MENU THEN WALL MENU THEN GREWALL.

```
C>
C>GREWALL
```

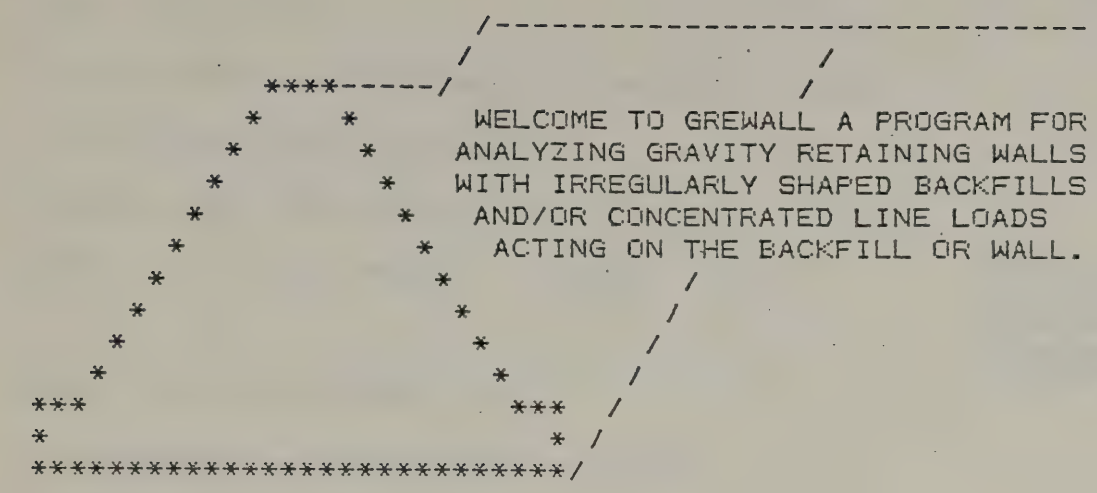

```
 WELCOME TO GREWALL A PROGRAM FOR
ANALYZING GRAVITY RETAINING WALLS
WITH IRREGULARLY SHAPED BACKFILLS
 AND/OR CONCENTRATED LINE LOADS
  ACTING ON THE BACKFILL OR WALL.

WHAT TITLE DO YOU WANT ON YOUR OUTPUT? ONE LINE LIMIT
     TITLE: EXAMPLE INPUT

IS THIS A BROKEN BACK WALL PROBLEM?
 YES ENTER 1, NO ENTER Ø,   Ø
DO YOU WANT TO CONSIDER GROUNDWATER?
 YES ENTER 1, NO ENTER Ø.   1

DO YOU WANT TO INPUT WALL CONFIGURATION?
 YES ENTER 1, NO ENTER Ø.   1
```

CONSULT USERS MANUAL FOR BROKEN BACK PROBLEMS

```
TO INPUT THE WALL CONFIGURATION DIVIDE THE WALL INTO
BLOCKS OF RECTANGLES AND RIGHT TRIANGLES. LABEL THE
BLOCKS USING THE FOLLOWING GUIDE .
YOU MUST ALSO BLOCK ANY SOIL SECTIONS WHICH ARE NOT
INCLUDED IN THE PRESSURE ANALYSIS. SOIL AND CONCRETE
BLOCKS CAN BE DISTINGUISHED BY THEIR UNIT WEIGHT.  IF
WATER IS PRESENT USE BUOYANT UNIT WEIGHT.
```

TO TAKE INTO ACCOUNT THE BUOYANT FORCES, THE USER MAY WISH TO SUPPER IMPOSE BLOCKS OF WATER WITH A UNIT WEIGHT OF -62.4 (pcf).

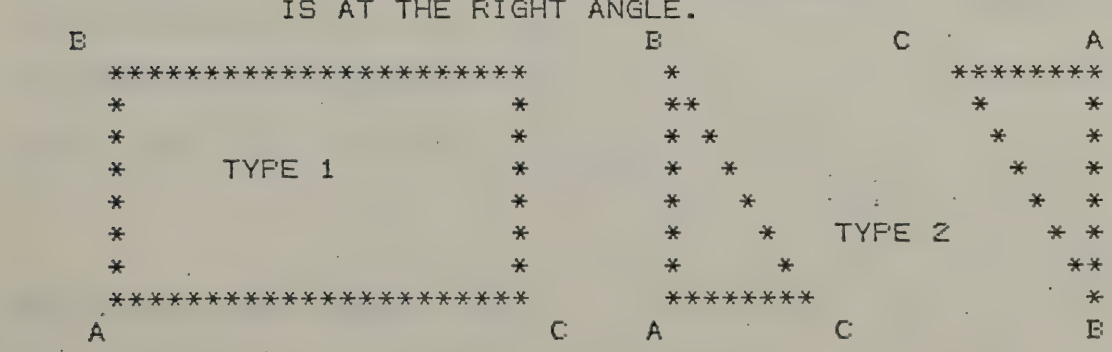


```
HOW MANY BLOCKS ARE NEEDED TO MODEL YOUR WALL?
 LIMIT TO 2Ø.   5
```

IT IS ONLY NECESSARY TO INPUT THE Y-COORD OF POINT B AND THE X-COORD OF POINT C. FOR THE BLOCK TYPE USE 1 FOR RECTANGLES AND 2 FOR TRIANGLES.

INPUT VALUES FOR BLOCK 1

X-COORDINATE, Y-COORDINATE OF POINT A Ø,Ø

Y-COORDINATE OF POINT B 2

X-COORDINATE OF POINT C 12

BLOCK TYPE, UNIT WEIGHT 1,87.6

USE THE BOUYANT UNIT WEIGHT FOR BLOCK NO. 1 BECAUSE IT IS ENTIRELY UNDER WATER.

INPUT VALUES FOR BLOCK 2

X-COORDINATE, Y-COORDINATE OF POINT A 1,2

Y-COORDINATE OF POINT B 2Ø

X-COORDINATE OF POINT C 7

BLOCK TYPE, UNIT WEIGHT 1,15Ø

INPUT VALUES FOR BLOCK 3

X-COORDINATE, Y-COORDINATE OF POINT A 7,2

Y-COORDINATE OF POINT B 2Ø

X-COORDINATE OF POINT C 12

BLOCK TYPE, UNIT WEIGHT 2,15Ø

INPUT VALUES FOR BLOCK 4

X-COORDINATE, Y-COORDINATE OF POINT A 9.5,2

Y-COORDINATE OF POINT B 1Ø

X-COORDINATE OF POINT C 1

BLOCK TYPE, UNIT WEIGHT 2,-62.4

USE THE TOTAL UNIT WEIGHT FOR BLOCKS NO. 2 AND 3 BECAUSE THEY ARE ONLY PARTIALLY UNDER WATER.

INPUT VALUES FOR BLOCK 5

X-COORDINATE, Y-COORDINATE OF POINT A 9.5,2

Y-COORDINATE OF POINT B 1Ø

X-COORDINATE OF POINT C 12

BLOCK TYPE, UNIT WEIGHT 2,-62.4

CORRECT BLOCKS 2 AND 3 BY SUBTRACTING OUT BLOCKS OF WATER (BLOCKS 4 AND 5)

```
WHAT IS THE WIDTH OF YOUR FOOTING? (feet)   12

TOTAL VERTICAL RESULTANT.....  22307. pounds
DISTANCE OF RESULTANT FROM TOE...    5.17 feet

DO THESE VALUES LOOK REASONABLE?
 YES ENTER Ø, NO ENTER 1.   Ø
```

IF THESE VALUES DO NOT LOOK REASONABLE THE PROGRAM WILL DISPLAY THE FORCE AND MOMENT ARM FOR EACH BLOCK AND PROMPT THE USER TO MAKE CHANGES

```
IF YOU HAVE ANY CONCENTRATED LOADS ACTING ON THE
WALL AT AN ANGLE, INPUT IT AS TWO LOADS, ONE IN THE
HORIZONTAL AND ONE IN THE VERTICAL DIRECTIONS.
ENTER THE TOTAL NUMBER OF LOADS, IF NONE ENTER Ø.   1

HORIZONTAL LOADS ARE TYPE 1,VERTICAL ARE TYPE 2.
INPUT THEM AS POSITIVE FOR DOWN AND RIGHT AND NEGATIVE
FOR UP AND LEFT.  ONLY INPUT THE X-COORDINATE FOR
VERTICAL LOADS AND Y-COORDINATE FOR HORIZONTAL LOADS.


INPUT  TYPE, LOAD(lb.), X OR Y-COORDINATE FOR LOAD  1
2,2ØØØ,5

HOW MANY LINES DESCRIBE YOUR BACKFILL? LIMIT TO 15   2

INPUT COORDINATE OF FIRST POINT OF LINE  1
X-COORDINATE ,Y-COORDINATE
7,2Ø

INPUT COORDINATE OF FIRST POINT OF LINE  2
X-COORDINATE ,Y-COORDINATE
18,24
 INPUT END POINT OF LINE   2
BE SURE TO EXTEND YOUR BACKFILL LINE PAST THE FAILURE PLANE
X-COORDINATE, Y-COORDINATE
1ØØ,24

HOW MANY CONCENTRATED LINE LOADS DO YOU WANT TO
CONSIDER ACTING ON YOUR BACKFILL?
 IF NONE ENTER Ø, IF SO ENTER NUMBER   1

INPUT THE MAGNITUDE OF THE LOAD AND ITS COORDINATES
FOR LOAD NUMBER   1
LOAD ,  X-,  Y-
2ØØØ,2Ø,24

INPUT STATIC WATER LEVELS, Y-COORDINATE
ABOVE TOE, ABOVE HEEL   2,1Ø

NOW YOU MUST INPUT THE SOIL PARAMETERS:

WHAT IS THE TOTAL UNIT WEIGHT OF YOUR BACKFILL?(pcf)  12Ø

WHAT IS THE FRICTION ANGLE OF YOUR BACKFILL?(degrees) 34

WHAT IS THE WALL FRICTION ANGLE? (degrees)   2Ø

WHAT WALL-SOIL COEFFICIENT OF FRICTION DO YOU WANT?   .55


DO YOU WANT THE ACTIVE OR PASSIVE PRESSURE DETERMINED?
 PASSIVE CASE ENTER 1,  ACTIVE CASE ENTER Ø.   Ø
```

GREWALL WILL DISPLAY THE INPUT BEFORE EACH RUN

TITLE: EXAMPLE INPUT

SOIL AND WALL PROPERTIES:

FRICTION ANGLE OF BACKFILL.....	34.ØØ degrees
TOTAL UNIT WEIGHT OF BACKFILL.....	12Ø.ØØ pcf
WALL FRICTION ANGLE.....	2Ø.ØØ degrees
COEFFICIENT OF FRICTION.....	Ø.55
WIDTH OF FOOTING.....	12.ØØ feet

BACKFILL CONFIGURATION:

		X COORDINATE	Y COORDINATE
FIRST POINT OF LINE	1	7.ØØ	2Ø.ØØ
SECOND POINT OF LINE	1	18.ØØ	24.ØØ
FIRST POINT OF LINE	2	18.ØØ	24.ØØ
SECOND POINT OF LINE	2	1ØØ.ØØ	24.ØØ
HEEL OF THE WALL		12.ØØ	Ø.ØØ

Execution suspended : PRESS ENTER TO CONTINUE

EXECUTION IS SUSPENDED TO ALLOW THE USER TO EXAMIN THE ENTIRE INPUT ON THE SCREEN.

CONCENTRATED LINE LOADS ON BACKFILL:

LOAD NO.	FORCE(pounds)	X-COORDINATE	Y-COORDINATE
1	2ØØØ.ØØ	2Ø.ØØ	24.ØØ

CONCENTRATED LINE LOADS ON WALL:

LOAD NO.	TYPE	FORCE(pounds)	MOMENT ARM(feet)
1	2	2ØØØ.ØØ	5.ØØ

WATER ELEVATION:

WATER ELEVATION ABOVE HEEL.....	1Ø.ØØ feet
WATER ELEVATION ABOVE TOE.....	2.ØØ feet

DO YOU WANT TO USE THIS INPUT OR MAKE CHANGES?
CHANGES ENTER 1, RUN THIS INPUT ENTER Ø. Ø

IF ANY OF YOUR INPUT IS WRONG ENTER 1 HERE. THE PROGRAM WILL PROMPT YOU TO MAKE CHANGES.

THE MOMENT ARM IS THE DISTANCE FROM THE ORIGIN (0,0)

SUMMARY OF FORCES AND MOMENT ARMS:

	FORCE(pounds)	MOMENT ARM(feet)
ACTIVE SOIL X-DIRECTION	8494.	7.96
ACTIVE SOIL Y-DIRECTION	5737.	10.01
WALL AND SOIL RESULTANT	22307.	5.17
WATER FORCE ABOVE TOE	62.	0.67
WATER FORCE ABOVE HEEL	312.	3.33
LOAD NO. 1 (BACKFILL)	707.	13.35
LOAD NO. 1 TYPE 2 (ON WALL)	2000.	5.00

FACTORS OF SAFETY:

OVERTURNING	2.34
SLIDING	1.75

FOOTING PRESSURES:

AT TOE	5655. PSF
AT HEEL	-647. PSF

WHEN THE HEEL PRESSURE IS NEGATIVE THE RESULTANT IS OUTSIDE THE MIDDLE THIRD OF THE FOOTING. THIS IS GENERAL UNACCEPTABLE. TRY CHANGING THE LOAD ON THE WALL TO CORRECT THIS.

WOULD YOU LIKE A HARD COPY OF YOUR RESULTS?
YES ENTER 1, NO ENTER 0. 0

DO YOU WANT TO CHANGE YOUR INPUT AND RERUN?
YES ENTER 1, NO ENTER 0. 1

WHAT WOULD YOU LIKE TO CHANGE?
TITLE.....1
SOIL PARAMETERS, OR ACTIVE/PASSIVE CASE....2
BACKFILL CONFIGURATION.....3
CONCENTRATED LINE LOADS ON BACKFILL.....4
WALL CONFIGURATION.....5
CONCENTRATED LINE LOADS ON WALL.....6
WATER LEVELS.....7

ENTER THE NUMBER CORRESPONDING TO DESIRED CHANGE. 6

IF YOU HAVE ANY CONCENTRATED LOADS ACTING ON THE WALL AT AN ANGLE, INPUT IT AS TWO LOADS, ONE IN THE HORIZONTAL AND ONE IN THE VERTICAL DIRECTIONS.
ENTER THE TOTAL NUMBER OF LOADS, IF NONE ENTER 0. 2

HORIZONTAL LOADS ARE TYPE 1,VERTICAL ARE TYPE 2.
INPUT THEM AS POSITIVE FOR DOWN AND RIGHT AND NEGATIVE FOR UP AND LEFT. ONLY INPUT THE X-COORDINATE FOR VERTICAL LOADS AND Y-COORDINATE FOR HORIZONTAL LOADS.

INPUT TYPE, LOAD(lb.), X OR Y-COORDINATE FOR LOAD 1
2,3940,5

TRY A 4000 POUND/FT. LOAD ACTING 10 FROM THE VERTICAL.

INPUT TYPE, LOAD(lb.), X OR Y-COORDINATE FOR LOAD 2
1,700,20

THE PROGRAM WILL DISPLAY THE INPUT AFTER EACH CHANGE TO BE CHECKED BY THE USER.

TITLE: EXAMPLE INPUT

SOIL AND WALL PROPERTIES:

FRICTION ANGLE OF BACKFILL.....	34.00	degrees
TOTAL UNIT WEIGHT OF BACKFILL.....	120.00	pcf
WALL FRICTION ANGLE.....	20.00	degrees
COEFFICIENT OF FRICTION.....	0.55	
WIDTH OF FOOTING.....	12.00	feet

BACKFILL CONFIGURATION:

		X COORDINATE	Y COORDINATE
FIRST POINT OF LINE	1	7.00	20.00
SECOND POINT OF LINE	1	18.00	24.00
FIRST POINT OF LINE	2	18.00	24.00
SECOND POINT OF LINE	2	100.00	24.00
HEEL OF THE WALL		12.00	0.00

Execution suspended : PRESS ENTER TO CONTINUE

CONCENTRATED LINE LOADS ON BACKFILL:

LOAD NO.	FORCE(pounds)	X-COORDINATE	Y-COORDINATE
1	2000.00	20.00	24.00

CONCENTRATED LINE LOADS ON WALL:

LOAD NO.	TYPE	FORCE(pounds)	MOMENT ARM(feet)
1	2	3940.00	5.00
2	1	700.00	20.00

WATER ELEVATION:

WATER ELEVATION ABOVE HEEL.....	10.00	feet
WATER ELEVATION ABOVE TOE.....	2.00	feet

DO YOU WANT TO USE THIS INPUT OR MAKE CHANGES?
CHANGES ENTER 1, RUN THIS INPUT ENTER 0. 0

SUMMARY OF
FORCES AND
MOMENT ARMS:

	FORCE(pounds)	MOMENT ARM(feet)
ACTIVE SOIL X-DIRECTION	8494.	7.96
ACTIVE SOIL Y-DIRECTION	5737.	10.01
WALL AND SOIL RESULTANT	22307.	5.17
WATER FORCE ABOVE TOE	62.	0.67
WATER FORCE ABOVE HEEL	312.	3.33
LOAD NO. 1 (BACKFILL)	707.	13.35
LOAD NO. 1 TYPE 2 (ON WALL)	3940.	5.00
LOAD NO. 2 TYPE 1 (ON WALL)	700.	20.00

FACTORS OF
SAFETY:

OVERTURNING	2.64
SLIDING	2.01

FOOTING
PRESSURES:

AT TOE	5314. PSF
AT HEEL	17. PSF

WOULD YOU LIKE A HARD COPY OF YOUR RESULTS?
YES ENTER 1, NO ENTER 0. 1

THE RESULTS LOOK GOOD SO GET A HARD COPY. SET THE PRINTER TO THE TOP OF A NEW PAGE.

TITLE: EXAMPLE INPUT

SOIL AND WALL PROPERTIES:

FRICTION ANGLE OF BACKFILL.....	34.00 degrees
TOTAL UNIT WEIGHT OF BACKFILL.....	120.00 pcf
WALL FRICTION ANGLE.....	20.00 degrees
COEFFICIENT OF FRICTION.....	0.55
WIDTH OF FOOTING.....	12.00 feet

BACKFILL CONFIGURATION:

		X COORDINATE	Y COORDINATE
FIRST POINT OF LINE	1	7.00	20.00
SECOND POINT OF LINE	1	18.00	24.00
FIRST POINT OF LINE	2	18.00	24.00
SECOND POINT OF LINE	2	100.00	24.00
HEEL OF THE WALL		12.00	0.00
BACKFILL FAILURE POINT		25.32	24.00

TO COMPLETE YOUR SKETCH OF THE PROGRAM DRAW A LINE FROM THE HEEL TO THIS POINT. THIS IS YOUR ANALYSED FAILURE PLAIN.

CONCENTRATED LINE LOADS ON BACKFILL:

LOAD NO.	FORCE(pounds)	X-COORDINATE	Y-COORDINATE
1	2000.00	20.00	24.00

CONCENTRATED LINE LOADS ON WALL:

LOAD NO.	TYPE	FORCE(pounds)	MOMENT ARM(feet)
1	2	3940.00	5.00
2	1	700.00	20.00

WATER ELEVATION:

WATER ELEVATION ABOVE HEEL.....	10.00 feet
WATER ELEVATION ABOVE TOE.....	2.00 feet

SUMMARY OF FORCES AND MOMENT ARMS:

	FORCE(pounds)	MOMENT ARM(feet)
ACTIVE SOIL X-DIRECTION	8494.	7.96
ACTIVE SOIL Y-DIRECTION	5737.	10.01
WALL AND SOIL RESULTANT	22307.	5.17
WATER FORCE ABOVE TOE	62.	0.67
WATER FORCE ABOVE HEEL	312.	3.33
LOAD NO. 1 (BACKFILL)	707.	13.35
LOAD NO. 1 TYPE 2 (ON WALL)	3940.	5.00
LOAD NO. 2 TYPE 1 (ON WALL)	700.	20.00

FACTORS OF SAFETY:

OVERTURNING	2.64
SLIDING	2.01

FOOTING PRESSURES:

AT TOE	5314. PSF
AT HEEL	17. PSF

XIII. FORTRAN LISTING

The following listing of GREWALL was compiled on January 19, 1987. Any changes made to the program should be noted on the master copy of this publication held in the drafting section of the Soil Mechanics Bureau.

```
C*********************************************************************
C
      PROGRAM GREWALL
C
C*********************************************************************
C
C THIS MAIN SECTION OF THE PROGRAM CONTROLS THE CALLING OF THE
C COMPUTATIONAL SUBROUTINES. IT COMPUTES THE PRESSURES DUE TO
C STATIC WATER CONDITIONS AND CONCENTRATED LINE LOADS IF SPECIFIED
C AND DETERMINES THE FACTORS OF SAFETY FOR OVERTURNING AND SLIDEING
C
      COMMON X(15,2),Y(15,2),Z(15,2),XCG(20),YCG(20),XQ(10),YQ(10)
     +,PA(100),XL(10),YL(10),AR(20),LOAD(10),XSS,YSS
     +,XSTART,YSTART,XTOP,YTOP,GI,ALPHA,PHI,DELTA,FAC,SBLOCK
     +,IWATER,WBACK,NOL,NOCL,IA,IP,LN,PAMAX,RHOMAX,RESDX,RESDY,NCL
     +,BASEL,NTYPE(8),WLOAD(8),WLX(8),NCH,FXBL,RXBL,CGX,CGY
      CHARACTER*60 TITLE
      REAL LOAD
      DIMENSION TLOAD(20),TLOADZ(20),BLOCK(20),XBL(20),XS(2,2),YS(2,2)
     +,XTLOAD(20),YTLOAD(20),TLOADY(20)
      WRITE(6,3)
 3    FORMAT(1X,
     + '                          /---------------------------------',/,1X,
     + '                         /                   /              ',/,1X,
     + '              ****------/                   /               ',/,1X,
     + '            *    *     . WELCOME TO GREWALL A PROGRAM FOR',/,1X,
     + '           *      *    ANALYZING GRAVITY RETAINING WALLS',/,1X,
     + '          *        *   WITH IRREGULARLY SHAPED BACKFILLS',/,1X,
     + '         *          *   AND/OR CONCENTRATED LINE LOADS  ',/,1X,
     + '        *            *   ACTING ON THE BACKFILL OR WALL.',/,1X,
     + '       *              *           /                     ',/,1X,
     + '      *                *         /                      ',/,1X,
     + '     *                  *       /                       ',/,1X,
     + '    *                    *     /                        ',/,1X,
     + ' ***                      ***  /                         ',/,1X,
     + ' *                          * /                          ',/,1X,
     + ' ****************************/                          ',//)
C
C DEFINE PROBLEM AND CALL WALL PROGRAM
C
      WRITE(6,*)'WHAT TITLE DO YOU WANT ON YOUR OUTPUT? ONE LINE LIMIT'
      WRITE(6,*)'     TITLE: '
      READ(5,71) TITLE
 71   FORMAT(A)
      WRITE(6,*)'IS THIS A BROKEN BACK WALL PROBLEM?  '
      WRITE(6,*)' YES ENTER 1, NO ENTER 0.   '
      READ(5,*) IBB
      WRITE(6,*)'DO YOU WANT TO CONSIDER GROUNDWATER?   '
      WRITE(6,*)' YES ENTER 1, NO ENTER 0.   '
      READ(5,*)IWATER
      WRITE(6,*)'DO YOU WANT TO INPUT WALL CONFIGURATION?  '
      WRITE(6,*)' YES ENTER 1, NO ENTER 0.   '
      READ(5,*) IWALL
      IF(IWALL.EQ.1) CALL WALL
 98     CONTINUE
      WRITE(6,*)'HOW MANY LINES DESCRIBE YOUR BACKFILL? LIMIT TO 15   '
      READ(5,*) NOL
      IF(NOL.GT.15)WRITE(6,*)'SORRY NO MORE THAN 15 TRY AGAIN'
      IF(NOL.GT.15)GO TO 98
      NOLC=NOL+1
      DO 10 LN=1,NOLC
      IF(LN.EQ.NOLC)WRITE(6,21) NOL
 21   FORMAT(1X,'INPUT END POINT OF LINE ',I3,/,1X
     +,'BE SURE TO EXTEND YOUR BACKFILL LINE PAST THE FAILURE PLANE'
     +,/,' X-COORDINATE, Y-COORDINATE  ',/)
```

```
      IF(LN.EQ.NOLC)GO TO 22
      WRITE(6,4) LN
C
C INPUT BACKFILL CONFIGURATION
C
 4    FORMAT(1X,'INPUT COORDINATE OF FIRST POINT OF LINE',I3
     +,/,' X-COORDINATE ,Y-COORDINATE ',/)
 22   CONTINUE
      READ(5,*) XT,YT
      X(LN,1)=XT
      Y(LN,1)=YT
      XTOP=X(1,1)
      YTOP=Y(1,1)
      IF(LN.LE.1)GO TO 20
      X(LN-1,2)=X(LN,1)
      Y(LN-1,2)=Y(LN,1)
      Z(LN-1,2)=Y(LN-1,2)
 20   CONTINUE
      Z(LN,1)=Y(LN,1)
 10   CONTINUE
C
C INPUT BACKWALL SHAPE FOR BROKENBACK PROBLEM
C
      IF(IBB.LE.0)GO TO 30
      WRITE(6,*)'INPUT COORDINATES OF BREAK POINT,   '
      WRITE(6,*)'  X-COORDINATE, Y-COORDINATE    '
      READ(5,*) XSTAR1,YSTAR1
 30   CONTINUE
      WRITE(6,*)'INPUT COORDINATES OF HEEL OF WALL.    '
      WRITE(6,*)' X-COORDINATE, Y-COORDINATE    '
      READ(5,*) XSTART,YSTART
      IF(NCH.EQ.3)GO TO 99
 97   CONTINUE
C
C CHECK FOR CONCENTRATED LINE LOADS AND INPUT
C
      WRITE(6,*)'HOW MANY CONCENTRATED LINE LOADS DO YOU WANT TO'
      WRITE(6,*)'CONSIDER ACTING ON YOUR BACKFILL?    '
      WRITE(6,*)' IF NONE ENTER 0, IF SO ENTER NUMBER    '
      READ(5,*)NOCL
      IF(NOCL.GT.10)WRITE(6,*)'SORRY NO MORE THAN 10, TRY AGAIN'
      IF(NOCL.GT.10)GO TO 97
      IF(NOCL.LE.0)GO TO 40
      DO 93 J=1,NOCL
      WRITE(6,6)J
 6    FORMAT(1X,'INPUT THE MAGNITUDE OF THE LOAD AND ITS COORDINATES',/,
     +1X,'FOR LOAD NUMBER ',I3,/,' LOAD ,  X-,  Y-',/)
      READ(5,*)LOADP,XLP,YLP
      LOAD(J)=LOADP
      XL(J)=XLP
      YL(J)=YLP
      XQ(J)=XL(J)
      YQ(J)=YL(J)
 93   CONTINUE
 40   CONTINUE
      IF(NCH.EQ.4)GO TO 99
C
C INPUT WATER CONDITIONS IF DESIRED
C
      IF(IWATER.EQ.0)GO TO 41
      WRITE(6,*)'INPUT STATIC WATER LEVELS, Y-COORDINATE'
      WRITE(6,*)'ABOVE TOE, ABOVE HEEL    '
      READ(5,*) WFRONT,WBACK
      FLY=WFRONT-YSTART
      BLY=WBACK-YSTART
 41   CONTINUE
```

```
      IF(NCH.EQ.7)GO TO 99
C
C INPUT SOIL PARAMITERS
C
      WRITE(6,*)'NOW YOU MUST INPUT THE SOIL PARAMETERS:'
      WRITE(6,*)' '
      WRITE(6,*)'WHAT IS THE TOTAL UNIT WEIGHT OF YOUR BACKFILL?(pcf)  '
      READ(5,*) GI
      WRITE(6,*)'WHAT IS THE FRICTION ANGLE OF YOUR BACKFILL?(degrees) '
      READ(5,*)PHI
      WRITE(6,*)'WHAT IS THE WALL FRICTION ANGLE? (degrees)    '
      READ(5,*)DELTA
      WRITE(6,*)'WHAT WALL-SOIL COEFFICIENT OF FRICTION DO YOU WANT?   '
      READ(5,*)FAC
      WRITE(6,*)' '
      WRITE(6,*)'DO YOU WANT THE ACTIVE OR PASSIVE PRESSURE DETERMINED?'
      WRITE(6,*)' PASSIVE CASE ENTER 1,  ACTIVE CASE ENTER Ø.    '
      READ(5,*)IAIP
 99   CONTINUE
      NCH=Ø
C
C DISPLAY INPUT AND CHECK FOR CHANGES
C
      WRITE(6,8)TITLE,PHI,GI,DELTA,FAC
 8    FORMAT(//,8X,'TITLE:  ',A,///,1X,'SOIL AND WALL',/'   PROPERTIES:'
     +/14X,'FRICTION ANGLE OF BACKFILL.....',F8.2,' degrees'
     +/14X,'TOTAL UNIT WEIGHT OF BACKFILL.....',F8.2,' pcf'
     +/14X,'WALL FRICTION ANGLE.....',F8.2,' degrees'
     +/14X,'COEFFICIENT OF FRICTION.....',F8.2)
      IF(IWALL.GT.Ø.)WRITE(6,5)BASEL
 5    FORMAT(14X,'WIDTH OF FOOTING.....',F8.2,' feet')
      WRITE(6,44)
 44   FORMAT(/,2X,'BACKFILL',/,' CONFIGURATION:              X COORDINATE
     +     Y COORDINATE')
      DO 42 I=1,NOL
      WRITE(6,45)I,X(I,1),Y(I,1)
 45   FORMAT(3X,'FIRST POINT OF LINE  ',I3,5X,F8.2,5X,F8.2)
      WRITE(6,43)I,X(I,2),Y(I,2)
 43   FORMAT(3X,'SECOND POINT OF LINE ',I3,5X,F8.2,5X,F8.2)
 42   CONTINUE
      WRITE(6,81Ø)XSTART,YSTART
 81Ø  FORMAT(3X,'HEEL OF THE WALL      ',8X,F8.2,5X,F8.2)
      IF(IBB.EQ.1)WRITE(6,811)XSTAR1,YSTAR1
 811  FORMAT(3X,'BREAK POINT OF THE WALL',6X,F8.2,5X,F8.2)
      PAUSE 'PRESS ENTER TO CONTINUE'
      IF(NOCL.LE.Ø)GO TO 51
      WRITE(6,9)
 9    FORMAT(/,2X,'CONCENTRATED',/,3X,'LINE LOADS',/,1X,' ON BACKFILL:
     +',/,16X,'LOAD NO.',2X,'FORCE(pounds)',6X,'X-COORDINATE ',
     +' Y-COORDINATE')
      DO 5Ø I=1,NOCL
      WRITE(6,11)I,LOAD(I),XQ(I),YQ(I)
 11   FORMAT(18X,I3,6X,F8.2,1ØX,F8.2,7X,F8.2)
 5Ø   CONTINUE
 51   CONTINUE
      IF(IWALL.LE.Ø.OR.NCL.LE.Ø)GO TO 52
      WRITE(6,2)
 2    FORMAT(/,2X,'CONCENTRATED',/,3X,'LINE LOADS',/,1X,'   ON WALL:'
     +,/,16X,'LOAD NO.   TYPE   FORCE(pounds)   MOMENT ARM(feet)')
      DO 53 I=1,NCL
      WRITE(6,39)I,NTYPE(I),WLOAD(I),WLX(I)
 39   FORMAT(18X,I3,7X,I2,5X,F8.2,12X,F8.2)
 53   CONTINUE
 52   CONTINUE
      IF(IWATER.LE.Ø)GO TO 61
      WRITE(6,12)BLY,FLY
```

```
12  FORMAT(1X,/,' WATER'/,4X,'ELEVATION:'
     +,/,15X,'WATER ELEVATION ABOVE HEEL.....',F8.2,' feet'
     +,/,15X,'WATER ELEVATION ABOVE TOE.....',F8.2,' feet')
61    CONTINUE
      WRITE(6,13)
13    FORMAT(//,1X,'DO YOU WANT TO USE THIS INPUT OR MAKE CHANGES?')
      WRITE(6,*)' CHANGES ENTER 1, RUN THIS INPUT ENTER Ø.    '
      READ(5,*)MCH
      IF(MCH.LE.Ø)GO TO 6Ø
79Ø   CONTINUE
      WRITE(6,*)'WHAT WOULD YOU LIKE TO CHANGE?'
      WRITE(6,*)' TITLE.....1'
      WRITE(6,*)' SOIL PARAMETERS, OR ACTIVE/PASSIVE CASE....2'
      WRITE(6,*)' BACKFILL CONFIGURATION.....3'
      WRITE(6,*)' CONCENTRATED LINE LOADS ON BACKFILL.....4'
      WRITE(6,*)' WALL CONFIGURATION.....5'
      WRITE(6,*)' CONCENTRATED LINE LOADS ON WALL.....6'
      WRITE(6,*)' WATER LEVELS.....7    '
      WRITE(6,*)' '
      WRITE(6,*)' ENTER THE NUMBER CORRESPONDING TO DESIRED CHANGE.    '
      READ(5,*)NCH
557   CONTINUE
      IF(NCH.EQ.1)WRITE(6,*)'INPUT NEW TITLE    '
      IF(NCH.EQ.1)READ(5,71)TITLE
      IF(NCH.EQ.1)GO TO 99
      IF(NCH.EQ.2)GO TO 41
      IF(NCH.EQ.3)GO TO 98
      IF(NCH.EQ.4)GO TO 97
      IF(NCH.EQ.5)IWALL=1
      IF((NCH.EQ.5).OR.(NCH.EQ.6))CALL WALL
      IF((NCH.EQ.6).OR.(NCH.EQ.5))GO TO 99
      IF(NCH.EQ.7)WRITE(6,*)' WOULD YOU LIKE TO CONSIDER WATER?  '
      IF(NCH.EQ.7)WRITE(6,*)' YES ENTER 1, NO ENTER Ø    '
      IF(NCH.EQ.7)READ(5,*)IWATER
      IF(NCH.EQ.7.AND.IWATER.EQ.1)GO TO 4Ø
      IF(NCH.EQ.7)GO TO 99
6Ø    CONTINUE
      IF(IAIP.LE.Ø)IA=1
      IF(IAIP.GE.1)IP=1
      IF(XTOP.LT.XSTART)    AL=ATAN((YTOP-YSTART)/(XSTART-XTOP))
      IF(XTOP.EQ.XSTART)    AL=1.57Ø
      IF(XTOP.GT.XSTART)    AL=3.141593-ATAN((YTOP-YSTART)/(XTOP-XSTART))
      ALPHA=AL*57.2958
C
C CHECK IF PROBLEM HAS A BROKEN BACK
C
      IF(IBB.EQ.Ø)GO TO 66
C
C
      XSTARTS=XSTART
      YSTARTS=YSTART
      XSTART=XSTAR1
      YSTART=YSTAR1
      IF(YSTART.GT.WBACK.AND.IWATER.EQ.1)IWAT=IWATER
      IF(YSTART.GT.WBACK.AND.IWATER.EQ.1)IWATER=Ø
      IF(XTOP.LT.XSTART)    AL=ATAN((YTOP-YSTART)/(XSTART-XTOP))
      IF(XTOP.EQ.XSTART)    AL=1.57Ø
      IF(XTOP.GT.XSTART)    AL=3.141593-ATAN((YTOP-YSTART)/(XTOP-XSTART))
      ALPHA=AL*57.2958
      ADELTA=DELTA-ALPHA+9Ø.
C
C COMPUTE PRESURE ABOVE BREAK
C
      CALL ACTPAS
C
      PAMAX1=PAMAX
```

```
      PAMAX=0.
      ADELTA1=ADELTA/57.2958
      YPAMAX1=SIN(ADELTA1)*PAMAX1
      XPAMAX1=COS(ADELTA1)*PAMAX1
C
      CALL CGCMAN
C
      RESDX1=RESDX
      RESDY1=RESDY
  800 CONTINUE
C
C INCRIMENT THE BACKFILL CONFIG. TO COMPUTE UPPER BROKEN BACK
C
C SAVE FIRST LINE FOR RERUN
      XS(1,2)=X(1,2)
      XS(1,1)=X(1,1)
      YS(1,2)=Y(1,2)
      YS(1,1)=Y(1,1)
      DO 857 I=1,NOL-1
      X(I,1)=X(I+1,1)
      Y(I,1)=Y(I+1,1)
      X(I,2)=X(I+1,2)
      Y(I,2)=Y(I+1,2)
      Z(I,1)=Y(I,1)
      Z(I,2)=Y(I,2)
  857 CONTINUE
      XTOP=X(1,1)
      YTOP=Y(1,1)
      IF(XTOP.LT.XSTART)    AL=ATAN((YTOP-YSTART)/(XSTART-XTOP))
      IF(XTOP.EQ.XSTART)    AL=1.570
      IF(XTOP.GT.XSTART)    AL=3.141593-ATAN((YTOP-YSTART)/(XTOP-XSTART))
      ALPHA=AL*57.2958
      ADELTA=DELTA-ALPHA+90.
      NOL=NOL-1
C
      CALL ACTPAS
C
      PAMAX2=PAMAX
      PAMAX=0.
      ADELTA2=ADELTA/57.2958
      YPAMAX2=SIN(ADELTA2)*PAMAX2
      XPAMAX2=COS(ADELTA2)*PAMAX2
C
      CALL CGCMAN
C
      RESDX2=RESDX
      RESDY2=RESDY
      XSTART=XSTARTS
      YSTART=YSTARTS
      IF(XTOP.LT.XSTART)    AL=ATAN((YTOP-YSTART)/(XSTART-XTOP))
      IF(XTOP.EQ.XSTART)    AL=1.57080
      IF(XTOP.GT.XSTART)    AL=3.1459-ATAN((YTOP-YSTART)/(XTOP-XSTART))
      ALPHA=AL*57.2958
      ADELTA=DELTA-ALPHA+90.
      IF(IWAT.EQ.1)IWATER=1
C
C COMPUTE PRESSURE ON FULL WALL OF BROKEN BACK PROBLEM
C
C
      CALL ACTPAS
      CALL CGCMAN
C
      ADELTA=ADELTA/57.2958
      YPAMAX=SIN(ADELTA)*PAMAX
      XPAMAX=COS(ADELTA)*PAMAX
      RESDX=(XPAMAX*RESDX-XPAMAX2*RESDX2)/(XPAMAX-XPAMAX2)
```

```
      RESDY=(YPAMAX*RESDY-YPAMAX2*RESDY2)/(YPAMAX-YPAMAX2)
      YPAMAX=YPAMAX-YPAMAX2
      XPAMAX=XPAMAX-XPAMAX2
C
C  REPLACE FIRST LINE TO ORIGINAL FOR RERUN
C
      NOL=NOL+1
      DO 801 I=2,NOL
      X(I,1)=X(I-1,1)
      X(I,2)=X(I-1,2)
      Y(I,1)=Y(I-1,1)
      Y(I,2)=Y(I-1,2)
 801  CONTINUE
      X(1,1)=XS(1,1)
      Y(1,1)=YS(1,1)
      X(1,2)=XS(1,2)
      Y(1,2)=YS(1,2)
      XTOP=X(1,1)
      YTOP=Y(1,1)
  66  CONTINUE
      IF(IBB.EQ.1)GO TO 77
C
      CALL ACTPAS
C
      CALL CGCMAN
C
      ADELTA=(DELTA-ALPHA+90.)/57.2958
      YPAMAX=SIN(ADELTA)*PAMAX
      XPAMAX=COS(ADELTA)*PAMAX
  77  CONTINUE
C
C COMPUTE WATER PRESURE AND UPLIFT
C
      IF(IWATER.EQ.0)GO TO 862
      GW=62.4
      WFL=.5*(WFRONT-YSTART)*GW
      WBL=.5*(WBACK-YSTART)*GW
      WFLR=((WFRONT-YSTART)/3.)
      WBLR=((WBACK-YSTART)/3.)
      WFLY=YSTART+WFLR
      WBLY=YSTART+WBLR
 862  CONTINUE
      ADELTA=DELTA+90.-ALPHA
C
C COMPUTE PRESURE DISTRIBUTION DUE TO CONCENTRATED LINE LOAD
C
      IF(NOCL.EQ.0)GO TO 950
      A=0.
      SH=0.
      SHZ=0.
      Q=0.
      P=0.
 900  CONTINUE
      DO 910 I=1,NOCL
      P=YL(I)-YTOP
      Q=XL(I)-XTOP
      IF((XTOP-XSTART).EQ.0) S=0.0
      IF((XTOP-XSTART).EQ.0) GO TO 925
      S=(YTOP-YSTART)/(XTOP-XSTART)
 925  CONTINUE
      A=A+1.
      IF(A.EQ.1.)GO TO 915
      Q=Q+S
      P=P+1.
 915  R=(Q**2 + P**2)**.5
      H=4*LOAD(I)*(Q**2)*P/(3.1459*(R**4))
```

```
      HZ=H*(YL(I)-P)
      SH=SH+H
      SHZ=SHZ+HZ
      IF((YL(I)-P).GT.YSTART)GO TO 925
      ATDELTA=(90.-ALPHA)/57.2958
      TLOAD(I)=(SH/A)*(YTOP-YSTART)
      XTLOAD(I)=TLOAD(I)*COS(ATDELTA)
      YTLOAD(I)=TLOAD(I)*SIN(ATDELTA)
      TLOADZ(I)=SHZ/SH
      AL=ATAN(ALPHA/57.2958)
      TLOADY(I)=(XSTART+((TLOADZ(I)-YSTART)*AL))
      A=0.
 910  CONTINUE
 950  CONTINUE
C
C DISPLAY A SUMMARY OF THE FORCES AND THEIR MOMENT ARMS
C
      WRITE(6,27)
 27   FORMAT(/,2X,' SUMMARY OF',/,4X,'FORCES AND',/,2X,' MOMENT ARMS:'
     +,/,34X,'FORCE(pounds)',10X,'MOMENT ARM(feet)')
      IF(IBB.EQ.1)WRITE(6,*)' ABOVE BREAK:'
      IF(IBB.EQ.1)WRITE(6,28)XPAMAX1,RESDX1,YPAMAX1,RESDY1
      IF(IBB.EQ.1)WRITE(6,*)' BELOW BREAK:'
      IF(IAIP.LE.0)WRITE(6,28)XPAMAX,RESDX,YPAMAX,RESDY
      IF(IAIP.GE.1)WRITE(6,23)XPAMAX,RESDX,YPAMAX,RESDY
      IF(IWALL.EQ.1)WRITE(6,24)SBLOCK,RXBL
      IF(IWATER.EQ.1)WRITE(6,36)WFL,WFLR,WBL,WBLR
      IF(NOCL.LE.0)GO TO 32
      DO 31 I=1,NOCL
      WRITE(6,26)I,TLOAD(I),TLOADZ(I)
 31   CONTINUE
 32   CONTINUE
      IF(NCL.LE.0)GO TO 34
      DO 33 I=1,NCL
      WRITE(6,29)I,NTYPE(I),WLOAD(I),WLX(I)
 33   CONTINUE
 34   CONTINUE
 28   FORMAT('     ACTIVE SOIL X-DIRECTION',8X,F8.0,16X,F8.2,/
     +,'     ACTIVE SOIL Y-DIRECTION',8X,F8.0,16X,F8.2)
 23   FORMAT('     PASSIVE SOIL X-DIRECTION',7X,F8.0,16X,F8.2,/
     +,'     PASSIVE SOIL Y-DIRECTION',7X,F8.0,16X,F8.2)
 24   FORMAT('     WALL AND SOIL RESULTANT',8X,F8.0,16X,F8.2)
 26   FORMAT('     LOAD NO.',I2,' (BACKFILL)',10X,F8.0,16X,F8.2)
 29   FORMAT('     LOAD NO.',I2,' TYPE',I2,' (ON WALL)',4X,F8.0,16X,F8.2)
 36   FORMAT('     WATER FORCE ABOVE TOE',10X,F8.0,16X,F8.2,/
     +,'     WATER FORCE ABOVE HEEL',9X,F8.0,16X,F8.2)
      IF(IWALL.LE.0.OR.IAIP.GE.1)GO TO 700
C
C  COMPUTE FACTOR OF SAFETY FOR OVERTURNING AND FOOTING PRESURES
C
C FOSO=OVERTURNING MOMENT
C FOSR=RESISTING MOMENT
C
      FOSO=XPAMAX*RESDX
      FOSR=YPAMAX*RESDY+SBLOCK*RXBL
      IF(IBB.EQ.1)FOSO=FOSO+XPAMAX1*RESDX1
      IF(IBB.EQ.1)FOSR=FOSR+YPAMAX1*RESDY1
      QT=YPAMAX+SBLOCK
      IF(IBB.EQ.1)QT=QT+YPAMAX1
      QH=FOSR
      IF(IWATER.GE.1)QT=QT-WUPS
      IF(IWATER.GE.1)FOSR=FOSR+WFL*WFLR
      IF(IWATER.GE.1)FOSO=FOSO+WBL*WBLR
      IF(NOCL.LE.0)GO TO 701
      DO 710 I=1,NOCL
      FOSO=FOSO+TLOAD(I)*TLOADZ(I)
```

```
 710 CONTINUE
 701 CONTINUE
     IF(NCL.LE.Ø)GO TO 7Ø2
     DO 72Ø I=1,NCL
     IF(WLOAD(I).LT.Ø.)FOSO=FOSO-WLOAD(I)*WLX(I)
     IF(WLOAD(I).GE.Ø.)FOSR=FOSR+WLOAD(I)*WLX(I)
     IF(NTYPE(I).EQ.2)QT=QT+WLOAD(I)
     IF(NTYPE(I).EQ.2)QH=QH+WLOAD(I)*WLX(I)
 72Ø CONTINUE
 7Ø2 CONTINUE
     FOSOV=FOSR/FOSO
     QTE=(BASEL/2)-((FOSR-FOSO)/QT)
     QHE=QT
C
C  QT=TOE PRESSURE
C  QH=HEEL PRESSURE
C
     QT=QHE/BASEL*(1.+(6.*QTE/BASEL))
     QH=QHE/BASEL*(1.-(6.*QTE/BASEL))
C
C  COMPUTE FACTOR OF SAFETY FOR SLIDING
C
     FOSS=XPAMAX
     FOSRS=SBLOCK+YPAMAX
     IF(IBB.EQ.1)FOSS=FOSS+XPAMAX1
     IF(IBB.EQ.1)FOSRS=FOSRS+YPAMAX1
     IF(NCL.LE.Ø)GO TO 73Ø
     DO 731 I=1,NCL
     IF(NTYPE(I).EQ.2)FOSRS=FOSRS+WLOAD(I)
     IF(NTYPE(I).EQ.1)FOSS=FOSS-WLOAD(I)
 731 CONTINUE
 73Ø CONTINUE
     IF(NOCL.LE.Ø)GO TO 74Ø
     DO 741 I=1,NOCL
     FOSS=FOSS+TLOAD(I)
 741 CONTINUE
     IF(IWATER.GE.1)FOSS=FOSS+WBL-WFL
 74Ø CONTINUE
     FOSS=(FOSRS*FAC)/FOSS
C
C  REPORT FACTORS OF SAFETY AND FOOTING PRESURES
C
     WRITE(6,54)FOSOV,FOSS
 54  FORMAT(/,' FACTORS OF',/,6X,'SAFETY:',/,14X,'OVERTURNING',3X,
    -F5.2,/,14X,'SLIDING',7X,F5.2)
     WRITE(6,59)QT,QH
 59  FORMAT(/,1X,'FOOTING',/,5X,'PRESSURES:',/,14X,'AT TOE    ',F8.Ø
    -,' PSF',/,14X,'AT HEEL  ',F8.Ø,' PSF',/)
 7ØØ CONTINUE
C
C SET UP OPTION TO PRINT OUTPUT
C
     WRITE(6,*)' WOULD YOU LIKE A HARD COPY OF YOUR RESULTS?    '
     WRITE(6,*)' YES ENTER 1, NO ENTER Ø.    '
     READ(5,*)IPRINT
     IF(IPRINT.LE.Ø)GO TO 755
     OPEN(6,FILE='PRN')
     WRITE(6,8)TITLE,PHI,GI,DELTA,FAC
     IF(IWALL.GT.Ø.)WRITE(6,5)BASEL
     WRITE(6,44)
     DO 42Ø I=1,NOL
     WRITE(6,45)I,X(I,1),Y(I,1)
     WRITE(6,43)I,X(I,2),Y(I,2)
 42Ø CONTINUE
     WRITE(6,81Ø)XSTART,YSTART
     IF(IBB.EQ.1)WRITE(6,811)XSTAR1,YSTAR1
```

```
      WRITE(6,812)XSS,YSS
  812 FORMAT(3X,'BACKFILL FAILURE POINT',7X,F8.2,5X,F8.2)
      IF(NOCL.LE.Ø)GO TO 751
      WRITE(6,9)
      DO 75ØØ I=1,NOCL
      WRITE(6,11)I,LOAD(I),XQ(I),YQ(I)
 75ØØ CONTINUE
  751 CONTINUE
      IF(IWALL.LE.Ø.OR.NCL.LE.Ø)GO TO 752
      WRITE(6,2)
      DO 753 I=1,NCL
      WRITE(6,39)I,NTYPE(I),WLOAD(I),WLX(I)
  753 CONTINUE
  752 CONTINUE
      IF(IWATER.LE.Ø)GO TO 761
      WRITE(6,12)BLY,FLY
  761 CONTINUE
      WRITE(6,27)
      IF(IBB.EQ.1)WRITE(6,*)' ABOVE BREAK:'
      IF(IBB.EQ.1)WRITE(6,28)XPAMAX1,RESDX1,YPAMAX1,RESDY1
      IF(IBB.EQ.1)WRITE(6,*)' BELOW BREAK:'
      IF(IAIP.LE.Ø)WRITE(6,28)XPAMAX,RESDX,YPAMAX,RESDY
      IF(IAIP.GE.1)WRITE(6,23)XPAMAX,RESDX,YPAMAX,RESDY
      IF(IWALL.EQ.1)WRITE(6,24)SBLOCK,RXBL
      IF(IWATER.EQ.1)WRITE(6,36)WFL,WFLR,WBL,WBLR
      IF(NOCL.LE.Ø)GO TO 772
      DO 771 I=1,NOCL
      WRITE(6,26)I,TLOAD(I),TLOADZ(I)
  771 CONTINUE
  772 CONTINUE
      IF(NCL.LE.Ø.OR.IWALL.LE.Ø)GO TO 774
      DO 773 I=1,NCL
      WRITE(6,29)I,NTYPE(I),WLOAD(I),WLX(I)
  773 CONTINUE
  774 CONTINUE
      IF(IWALL.LE.Ø)GO TO 776
      WRITE(6,54)FOSOV,FOSS
      WRITE(6,59)QT,QH
  776 CONTINUE
      CLOSE(6)
  755 CONTINUE
C
C SET UP OPTION TO CHANGE INPUT AND RERUN
C
C
      WRITE(6,*)' DO YOU WANT TO CHANGE YOUR INPUT AND RERUN?'
      WRITE(6,*)' YES ENTER 1, NO ENTER Ø.    '
      READ(5,*)MCH2
      IF(MCH2.GE.1)GO TO 79Ø
      STOP
      END
C
C
C*********************************************************************
C  SUBROUTINE WALL
C*********************************************************************
C
C THIS SUBROUTINE ACCEPTS THE WALL CONFIGURATION INPUT AND
C ANY CONCENTRATED LINE LOADS ACTING ON THE WALL. IT ALSO
C COMPUTES THE FORCE AND MOMENT ARM OF THE WALL FOR THE
C OVERTURNING AND SLIDEING FACTORS OF SAFETY
C
      SUBROUTINE WALL
      COMMON X(15,2),Y(15,2),Z(15,2),XCG(2Ø),YCG(2Ø),XQ(1Ø),YQ(1Ø)
     -,PA(1ØØ),XL(1Ø),YL(1Ø),AR(2Ø),LOAD(1Ø),XSS,YSS
     -,XSTART,YSTART,XTOP,YTOP,GI,ALPHA,PHI,DELTA,FAC,SBLOCK
```

```
     -,IWATER,WBACK,NOL,NOCL,IA,IP,LN,PAMAX,RHOMAX,RESDX,RESDY,NCL
     +,BASEL,NTYPE(8),WLOAD(8),WLX(8),NCH,FXBL,RXBL,CGX,CGY
      DIMENSION BLOCK(2Ø),XBL(2Ø)
C
C CHECK IF CHANGES ARE BEING MADE
C
        IF(NCH.EQ.6)GO TO 2Ø
C
C DESCRIBE INPUT PROCEDURE
C
      WRITE(6,*)'TO INPUT THE WALL CONFIGURATION DIVIDE THE WALL INTO'
      WRITE(6,*)'BLOCKS OF RECTANGLES AND RIGHT TRIANGLES. LABEL THE  '
      WRITE(6,*)'BLOCKS USING THE FOLLOWING GUIDE .'
      WRITE(6,*)'YOU MUST ALSO BLOCK ANY SOIL SECTIONS WHICH ARE NOT'
      WRITE(6,*)'INCLUDED IN THE PRESSURE ANALYSIS. SOIL AND CONCRETE'
      WRITE(6,*)'BLOCKS CAN BE DISTINGUISHED BY THEIR UNIT WEIGHT.  IF'
      WRITE(6,*)'WATER IS PRESENT USE BUOYANT UNIT WEIGHT.'
      WRITE(6,1)
 1    FORMAT(//,'        NOTE THAT THE FIRST POINT OF A TRIANGLE (A) ',
     +/,1X,'                IS AT THE RIGHT ANGLE.                      ',
     +/,1X,'   B                                B             C          A ',
     +/,1X,'     **********************        *               ******** ',
     +/,1X,'     *                    *        **                *     * ',
     +/,1X,'     *                    *        * *               *    * ',
     +/,1X,'     *     TYPE 1         *        *  *               *   * ',
     +/,1X,'     *                    *        *   *               *  * ',
     +/,1X,'     *                    *        *    *   TYPE 2     * * ',
     +/,1X,'     *                    *        *     *              ** ',
     +/,1X,'     **********************        ********              * '
     +/,1X,'    A                        C    A         C            B '
     +/,1X,'                                                           ')
 4Ø   CONTINUE
      WRITE(6,*)'HOW MANY BLOCKS ARE NEEDED TO MODEL YOUR WALL?  '
      WRITE(6,*)' LIMIT TO 2Ø.   '
      READ(5,*)NBLOCK
      IF(NBLOCK.GT.2Ø)WRITE(6,*)'SORRY NO MORE THAN 2Ø, TRY AGAIN'
      IF(NBLOCK.GT.2Ø)GO TO 4Ø
      WRITE(6,*)' IT IS ONLY NECESSARY TO INPUT THE Y-COORD OF POINT B'
      WRITE(6,*)'AND THE X-COORD OF POINT C.  FOR THE BLOCK TYPE      '
      WRITE(6,*)'USE 1 FOR RECTANGLES AND 2 FOR TRIANGLES.'
      SUXBL=Ø.Ø
      FXBL=Ø.Ø
      SBLOCK=Ø.Ø
C
C READ IN WALL BLOCK UNITS
C
      DO 1Ø I=1,NBLOCK
      WRITE(6,2) I
 2    FORMAT(//,1X,'INPUT VALUES FOR BLOCK ',I3,/,1X)
      WRITE(6,*)' X-COORDINATE, Y-COORDINATE OF POINT A   '
      READ(5,*) XA,YA
      WRITE(6,*)' Y-COORDINATE OF POINT B   '
      READ(5,*)YB
      WRITE(6,*)' X-COORDINATE OF POINT C   '
      READ(5,*)XC
      WRITE(6,*)' BLOCK TYPE, UNIT WEIGHT   '
      READ(5,*)ITYPE,UNWT
      BLOCK(I)=ABS(XC-XA)*ABS(YB-YA)*UNWT
      IF(ITYPE.EQ.2)BLOCK(I)=.5*BLOCK(I)
      XBL(I)=(XC-XA)/2+XA
      IF(ITYPE.EQ.2.AND.XA.GT.XC)XBL(I)=XA-(XA-XC)*.333
      IF(ITYPE.EQ.2.AND.XA.LT.XC)XBL(I)=XA+(XC-XA)*.3333
      SUXBL=SUXBL+XBL(I)
      FXBL=BLOCK(I)*XBL(I)+FXBL
      SBLOCK=SBLOCK+BLOCK(I)
 1Ø   CONTINUE
```

```
      WRITE(6,*)'WHAT IS THE WIDTH OF YOUR FOOTING? (feet)    '
      READ(5,*)BASEL
      IF(NCU.EQ.5)RETURN
 11   CONTINUE
      SFXBL=FXBL/SUXBL
      RXBL=FXBL/SBLOCK
      WRITE(6,3)SBLOCK,RXBL
C
C CHECK FORCES FROM BLOCKS
C
 3    FORMAT(///,' TOTAL VERTICAL RESULTANT..........',F8.Ø,' pounds',/
     +,1X,'DISTANCE OF RESULTANT FROM TOE... ',F8.2,' feet',///)
      WRITE(6,*)'DO THESE VALUES LOOK REASONABLE?    '
      WRITE(6,*)' YES ENTER Ø, NO ENTER 1.    '
      READ(5,*) NHELP
      IF(NHELP.EQ.Ø)GO TO 2Ø
      WRITE(6,*)'CHECK YOUR INPUT !'
      WRITE(6,*)' '
      DO 3Ø I=1,NBLOCK
      WRITE(6,4) I,BLOCK(I),I,XBL(I)
 4    FORMAT(//,1X,'FORCE OF BLOCK' ,I3,' IS ',F8.2,' pounds',/
     +,1X,'MOMENT ARM OF BLOCK' ,I3,' IS ',F8.2,' feet')
 3Ø   CONTINUE
C
C CHECK IF CHANGES SHOULD BE MADE
C
      WRITE(6,*)'DO YOU WANT TO MAKE A CHANGE?    '
      WRITE(6,*)' YES ENTER 1, NO ENTER Ø.    '
      READ(5,*)NCHS
      IF(NCHS.LE.Ø)GO TO 2Ø
 31   CONTINUE
      WRITE(6,*)'WHICH BLOCK?    '
      READ(5,*) IJ
      WRITE(6,*)'INPUT THE NEW FORCE AND MOMENT ARM    '
      READ(5,*)PBLOCK,PXBL
      BLOCK(IJ)=PBLOCK
      XBL(IJ)=PXBL
      WRITE(6,*)'DO YOU WANT TO MAKE ANOTHER CHANGE?    '
      WRITE(6,*)' YES ENTER 1, NO ENTER Ø.    '
      READ(5,*)N
      IF(N.EQ.1)GO TO 31
      SUXBL=Ø.Ø
      FXBL=Ø.Ø
      SBLOCK=Ø.Ø
      DO 12 I=1,NBLOCK
      FXBL=BLOCK(I)*XBL(I)+FXBL
      SUXBL=SUXBL+XBL(I)
      SBLOCK=SBLOCK+BLOCK(I)
 12   CONTINUE
      GO TO 11
 2Ø   CONTINUE
      IF(NCH.EQ.5)GO TO 21
C
C INPUT CONCENTRATED LINE LOADS ON WALL
C
 41   CONTINUE
      WRITE(6,*)'IF YOU HAVE ANY CONCENTRATED LOADS ACTING ON THE '
      WRITE(6,*)'WALL AT AN ANGLE, INPUT IT AS TWO LOADS, ONE IN THE'
      WRITE(6,*)'HORIZONTAL AND ONE IN THE VERTICAL DIRECTIONS.'
      WRITE(6,*)'ENTER THE TOTAL NUMBER OF LOADS, IF NONE ENTER Ø.    '
      READ(5,*)NCL
      IF(NCL.GT.8)WRITE(6,*)'SORRY NO MORE THAN 8, TRY AGAIN'
      IF(NCL.GT.8)GO TO 41
      IF(NCL.LE.Ø)GO TO 21
      WRITE(6,*)'HORIZONTAL LOADS ARE TYPE 1,VERTICAL ARE TYPE 2.'
      WRITE(6,*)'INPUT THEM AS POSITIVE FOR DOWN AND RIGHT AND NEGATIVE'
```

```
      WRITE(6,*)'FOR UP AND LEFT.  ONLY INPUT THE X-COORDINATE FOR  '
      WRITE(6,*)'VERTICAL LOADS AND Y-COORDINATE FOR HORIZONTAL LOADS.'
      DO 22 J=1,NCL
      WRITE(6,5) J
 5    FORMAT(//,1X,'INPUT  TYPE, LOAD(lb.), X OR Y-COORDINATE FOR LOAD'   ',I3
     +,I3,/)
      READ(5,*)NTYPEP,WLOADP,WLXP
      NTYPE(J)=NTYPEP
      WLOAD(J)=WLOADP
      WLX(J)=WLXP
 22   CONTINUE
 21   CONTINUE
      RETURN
      END
C
C
C
C
C*************************************************************************
C SUBROUTINE ACTPAS
C*************************************************************************
C
C THIS SUBROUTINE COMPUTES THE ACTIVE OR PASSIVE PRESSURE RESULTANT
C BY THE USE OF THE FORCE POLYGONS PRESENTED IN J. E. BOWLES
C FOUNDATION ANALYSIS AND DESIGN
C
      SUBROUTINE ACTPAS
      COMMON X(15,2),Y(15,2),Z(15,2),XCG(20),YCG(20),XQ(10),YQ(10)
     -,PA(100),XL(10),YL(10),AR(20),LOAD(10),XSS,YSS
     -,XSTART,YSTART,XTOP,YTOP,GI,ALPHA,PHI,DELTA,FAC,SBLOCK
     -,IWATER,WBACK,NOL,NOCL,IA,IP,LN,PAMAX,RHOMAX,RESDX,RESDY,NCL
     +,BASEL,NTYPE(8),WLOAD(8),WLX(8),NCH,FXBL,RXBL,CGX,CGY
      DO 101 N=1,100
 101  PA(N)=0.0
      RHOMAX=0.0
      RHO=0.0
      PAMAX=0.0
      SMNO=.1
      BIGNO=999999999.
      IF(IP.GT.0)PAMAX=100000.
      WEIGHT=0.0
      TAREA=0.0
      TAM1=0.0
      CS=0.0
      X3=XTOP
      Y3=YTOP
      PI=PHI/57.2958
      DE=DELTA/57.2958
      AL=ALPHA/57.2958
C
C START LOOP TO INCREMENT RHO FROM MAX TO MIN VALUES
C
      II=1
      J=1
      JJ1=0
      XI=0.0
      YI=0.0
      A=0.0
      B=0.0
      IF(ALPHA.GT.90.)RHO=180.-ALPHA+2.
      IF(ALPHA.LE.90.)RHO=90.-4.
      IF(IP.GT.0)RHO=90.-15.
      I=1
C
C       LIMITED TO 100 ITERATIONS
C
```

```
      DO 200 I=1,100
      RHO=RHO-1.
      IF(RHO.LT.(PHI-2.).AND.IA.GT.0)GO TO 204
      IF(RHO.LT.0..AND.IP.GT.0)GO TO 204
      RH=RHO/57.2958
      B=(SIN(RH)/COS(RH))
      A=(Z(J,2)-Z(J,1))/(X(J,2)-X(J,1))
      XI=(YSTART-Z(J,1)-B*XSTART+A*X(J,1))/(A-B)
C
C  TEST FOR LINE INTERSECTIONS
C
      IF(ABS(XI-X(J,2)).LE.SMNO)XI=X(J,2)
      IF(ABS(X(J,2)-X3).LE.(XI-X3))XI=X(J,2)
      IF(ABS(XI-X(J,2)).LE.SMNO.AND.J.LT.NOL)J=J+1
  106 IF(J.LE.NOL)YI=A*XI-A*X(J,1)+Z(J,1)
      IF(XI.EQ.X(J,2))YI=Z(J,2)
C
C   COMPUTE ACTUAL RHO AS BASED ON X,Y COORDINATES
C
  108 IF((XI-XSTART).LE.0.)XI=XSTART+.0001
      RHO=(ATAN((YI-YSTART)/(XI-XSTART)))*57.2958
      RH=RHO/57.2958
C
C SUBTRACT WATER FROM WEIGHT OF WEDGE
C
      IF(IWATER.LE.0)GO TO 41
      WWNEW=WWATER
      IF(ALPHA.EQ.90.)DDW=0.0
      IF(ALPHA.GT.90.)DDW=-.5*((WBACK-YSTART)**2)
     -*(SIN(AL-1.5707)/COS(AL-1.5707))
      IF(ALPHA.LT.90.)DDW=.5*((WBACK-YSTART)**2)
     -*(SIN(1.5707-AL)/COS(1.5707-AL))
      GW=62.4
      AREAW=.5*((WBACK-YSTART)**2)*(SIN(1.5707-RH)/COS(1.5707-RH))
      WWATER=AREAW*GW+(DDW*GW)
C
C COMPUTE THE AREA OF THE WEDGE
C
   41 DAREA=.5*((XSTART+X3)*(YSTART-Y3)+(X3+XI)*(Y3-YI)-(XSTART+XI)*(Y
     /START-YI))
      TAREA=TAM1+DAREA
      TAM1=TAREA
   36 WEIGHT=DAREA*GI+WEIGHT
      IF(IWATER.EQ.1)WEIGHT=WEIGHT-WWATER+WWNEW
   43 CONTINUE
C
C COMPUTE ACTIVE OR PASIVE PRESSURE
C
      PA(II)=WEIGHT*SIN(RH-PI)/SIN(3.14159-AL+DE-RH+PI)
      IF(IP.GT.0)PA(II)=WEIGHT*SIN(RH+PI)/SIN(3.14159-AL-DE-RH-PI)
C
C TEST FOR MAX PA FOR ACTIVE AND MINIMUM PASSIVE
C
      IF(IA.GT.0)GO TO 76
      IF(PA(II).LT.PAMAX.AND.PA(II).GT.0.)PAMAX=PA(II)
      IF(PAMAX.EQ.PA(II))RHOMAX=RHO
      IF(PAMAX.NE.PA(II))GO TO 85
      GO TO 77
   76 IF(PA(II).GT.PAMAX)PAMAX=PA(II)
      IF(PAMAX.EQ.PA(II))RHOMAX=RHO
      IF(PAMAX.NE.PA(II))GO TO 85
   77 XMAX=XI
      YMAX=YI
      AMAX=TAREA
      WMAX=WEIGHT
      CSMAX=CS
```

```
      XMAX1=X3
      YMAX1=Y3
      IMAX=II
C
C CHECK FOR INCREASING OR DECREASING VALUES OF PA
C
   85 IF(IA.GT.Ø)GO TO 87
      PERC=1.25*PAMAX
      IF(NOL.EQ.1)PERC=1.Ø8*PAMAX
      IF(PA(II).GT.PERC)GO TO 2Ø4
      GO TO 83
   87 PERC=.75*PAMAX
      IF(NOL.EQ.1)PERC=Ø.9*PAMAX
      IF(PERC.LE.Ø..OR.PA(II).LE.Ø.)GO TO 83
      IF(PA(II).LT.PERC)GO TO 2Ø4
   83 CONTINUE
      X3=XI
      Y3=YI
  19Ø JJ1=Ø
      II=II+1
  2ØØ CONTINUE
  2Ø4 CONTINUE
      WWATER=Ø.
      WWNEW=Ø.
      RETURN
      END
C*****************************************************************************
C   SUBROUTINE CGCMAN
C*****************************************************************************
C
C THIS SUBROUTINE WILL COMPUTE THE CENTER OF GRAVITY OF THE
C FAILURE WEDGE AND DETERMIN THE POINT OF APPLICATION OF THE
C ACTIVE OR PASSIVE SOIL PRESSURE RESULTANT
C
      SUBROUTINE CGCMAN
      COMMON X(15,2),Y(15,2),Z(15,2),XCG(2Ø),YCG(2Ø),XQ(1Ø),YQ(1Ø)
     -,PA(1ØØ),XL(1Ø),YL(1Ø),AR(2Ø),LOAD(1Ø),XSS,YSS
     -,XSTART,YSTART,XTOP,YTOP,GI,ALPHA,PHI,DELTA,FAC,SBLOCK
     -,IWATER,WBACK,NOL,NOCL,IA,IP,LN,PAMAX,RHOMAX,RESDX,RESDY,NCL
     -,BASEL,NTYPE(8),WLOAD(8),WLX(8),NCH,FXBL,RXBL,CGX,CGY
      DIMENSION XS(15,2), YS(15,2)
C
C COMPUTE THE C.G. OF THE SOIL BEHIND THE WALL
C
      J=Ø
      CGX=Ø.Ø
      CGY=Ø.Ø
      AL=ALPHA/57.2958
      RHM=RHOMAX/57.2958
      PI=PHI/57.2958
      IF(ALPHA.EQ.9Ø.)AR(1)=Ø.Ø
      IF(ALPHA.GT.9Ø.)AR(1)=-.5*((YTOP-YSTART)**2)
     -*(SIN(AL-1.57Ø7)/COS(AL-1.57Ø7))
      IF(ALPHA.LT.9Ø.)AR(1)=-.5*((YTOP-YSTART)**2)
     -*(SIN(AL-1.57Ø7)/COS(AL-1.57Ø7))
      AR(2)=.5*((YTOP-YSTART)**2)*(SIN(1.57Ø7-RHM)/
     -COS(1.57Ø7-RHM))
      XCG(1)=XSTART+((XTOP-XSTART)/3.)
      YCG(1)=YSTART+(2*(YTOP-YSTART)/3.)
      XCG(2)=XSTART+((YTOP-YSTART)*(SIN(1.57Ø7-RHM)/COS
     -(1.57Ø7-RHM))/3.)
      YCG(2)=YSTART+(2.*(YTOP-YSTART)/3.)
C
C SUBTRACT OUT THE WATER IF THEIR IS ANY
C
      IF(IWATER.LE.Ø)GO TO 565
```

```
      IF(ALPHA.EQ.90.)AR(3)=0.0
      IF(ALPHA.GT.90.)AR(3)=.5*((WBACK-YSTART)**2)
     -*(SIN(AL-1.5707)/COS(AL-1.5707))
      IF(ALPHA.LT.90.)AR(3)=-.5*((WBACK-YSTART)**2)
     -*(SIN(1.5707-AL)/COS(1.5707-AL))
      AR(4)=-.5*((WBACK-YSTART)**2)*(SIN(1.5707-RHM)/COS(1.5707-RHM))
      XCG(3)=XSTART+((WBACK-YSTART)*((SIN(ABS(1.5707-AL))/
     -COS(ABS(1.5707-AL)))/3.))
      YCG(3)=YSTART+(2*(WBACK-YSTART)/3.)
      XCG(4)=XSTART+((WBACK-YSTART)/(SIN(1.5707-RHM)/COS(1.5707-RHM))
     -/3.)
      YCG(4)=YSTART+(2.*(WBACK-YSTART)/3.)
  565 CONTINUE
      J=2
      IF(IWATER.EQ.1)J=4
C
C COMPUTE THE C.G. FOR BACKFILL ABOVE THE WALL
C
      R1M=SIN(RHM)/COS(RHM)
      R2M=(Y(1,2)-Y(1,1))/(X(1,2)-X(1,1))
      XSS=((YSTART-(R1M*XSTART))-(Y(1,1)-(R2M*X(1,1))))/(R2M-R1M)
      YSS=(YSTART+((X(1,2)-XSTART)*R1M))
      IF((Y(1,1).GE.Y(1,2)).AND.(R1M*(X(1,2)-XSTART).GE.Y(1,2)-YSTART))
     +GO TO 571
      LN=0
  579 CONTINUE
      LN=LN+1
      IF((X(LN,2)-X(LN,1)).LE.0.0)X(LN,2)=X(LN,2)+.0001
C
C CHECK IF LINE INTERSECTS THE FAILURE PLANE
C
      IF((R1M*(X(LN,2)-XSTART)).LT.(Y(LN,2)-YSTART))GO TO 570
      XS(LN,2)=X(LN,2)
      YS(LN,2)=Y(LN,2)
      R2M=(Y(LN,2)-Y(LN,1))/(X(LN,2)-X(LN,1))
C
C DETERMINE THE POINT OF INTERSECTION
C
      X(LN,2)=((YSTART-(R1M*XSTART))-(Y(LN,1)-(R2M*X(LN,1))))/(R2M-R1M)
      Y(LN,2)=(YSTART+((X(LN,2)-XSTART)*R1M))
      XSS=X(LN,2)
      YSS=Y(LN,2)
      J=J+1
      AR(J)=.5*(Y(LN,2)-Y(LN,1))*(X(LN,2)-X(LN,1))
      XCG(J)=X(LN,2)-(X(LN,2)-X(LN,1))/3.
      YCG(J)=Y(LN,1)+(Y(LN,2)-Y(LN,1))/3.
      J=J+1
      AR(J)=(Y(LN,1)-YTOP)*(X(LN,2)-X(LN,1))
      XCG(J)=X(LN,1)+((X(LN,2)-X(LN,1))/2.)
      YCG(J)=Y(LN,1)+((Y(LN,2)-Y(LN,1))/2.)
      J=J+1
C
C SUBTRACT TRIANGLE BEHIND FAILURE PLAIN
C
      AR(J)=-.5*(Y(LN,2)-YTOP)**2*(TAN(1.5707-RHM))
      XCG(J)=X(LN,2)-((Y(LN,2)-YTOP)*(TAN(1.5707-RHM))/3.)
      YCG(J)=YTOP+((Y(LN,2)-YTOP)/3.)
      X(LN,2)=XS(LN,2)
      Y(LN,2)=YS(LN,2)
      GO TO 571
  570 CONTINUE
      J=J+1
      AR(J)=.5*(Y(LN,2)-Y(LN,1))*(X(LN,2)-X(LN,1))
      XCG(J)=X(LN,2)-(X(LN,2)-X(LN,1))/3.
      YCG(J)=Y(LN,1)+(Y(LN,2)-Y(LN,1))/3.
      J=J+1
```

```
      AR(J)=(Y(LN,1)-YTOP)*(X(LN,2)-X(LN,1))
      XCG(J)=X(LN,1)+((X(LN,2)-X(LN,1))/2.)
      YCG(J)=Y(LN,1)+((Y(LN,2)-Y(LN,1))/2.)
      IF(LN.GE.NOL)GO TO 571
      GO TO 579
  571 CONTINUE
      WARTX=0.0
      WARTY=0.0
      GW=62.4
      GIA=GI
      TOTAR=0.0
      DO 577 I=1,J
      IF(IWATER.GT.0.AND.I.GT.2.AND.I.LT.5)GIA=GW
      WARTX=WARTX+AR(I)*XCG(I)*GIA
      WARTY=WARTY+AR(I)*YCG(I)*GIA
      TOTAR=TOTAR+(AR(I)*GIA)
      GIA=GI
  577 CONTINUE
      CGX=WARTX/TOTAR
      CGY=WARTY/TOTAR
      LOAD(0)=TOTAR
C
C DETERMINE THE POINT OF APPLICATION OF THE ACTIVE OR PASS RESULTANT
C
      RHM=RHOMAX/57.2958
      AC=ACOS((XTOP-XSTART)/(SQRT((XTOP-XSTART)**2+(YTOP-YSTART)**2)))
      AA=TAN(AC)
      AB=TAN(RHM)
      BA=YSTART-(AA*XSTART)
      BB=CGY-(AB*CGX)
      IF((ABS(XTOP-XSTART)).LE..5)RESDY=XSTART
      IF((ABS(XTOP-XSTART)).LE..5)RESDX=AB*XSTART+BB
      IF((ABS(XTOP-XSTART)).LE..5)RETURN
      RESDY=(BB-BA)/(AA-AB)
      RESDX=AB*RESDY+BB
      RETURN
      END
```

00951
LRI